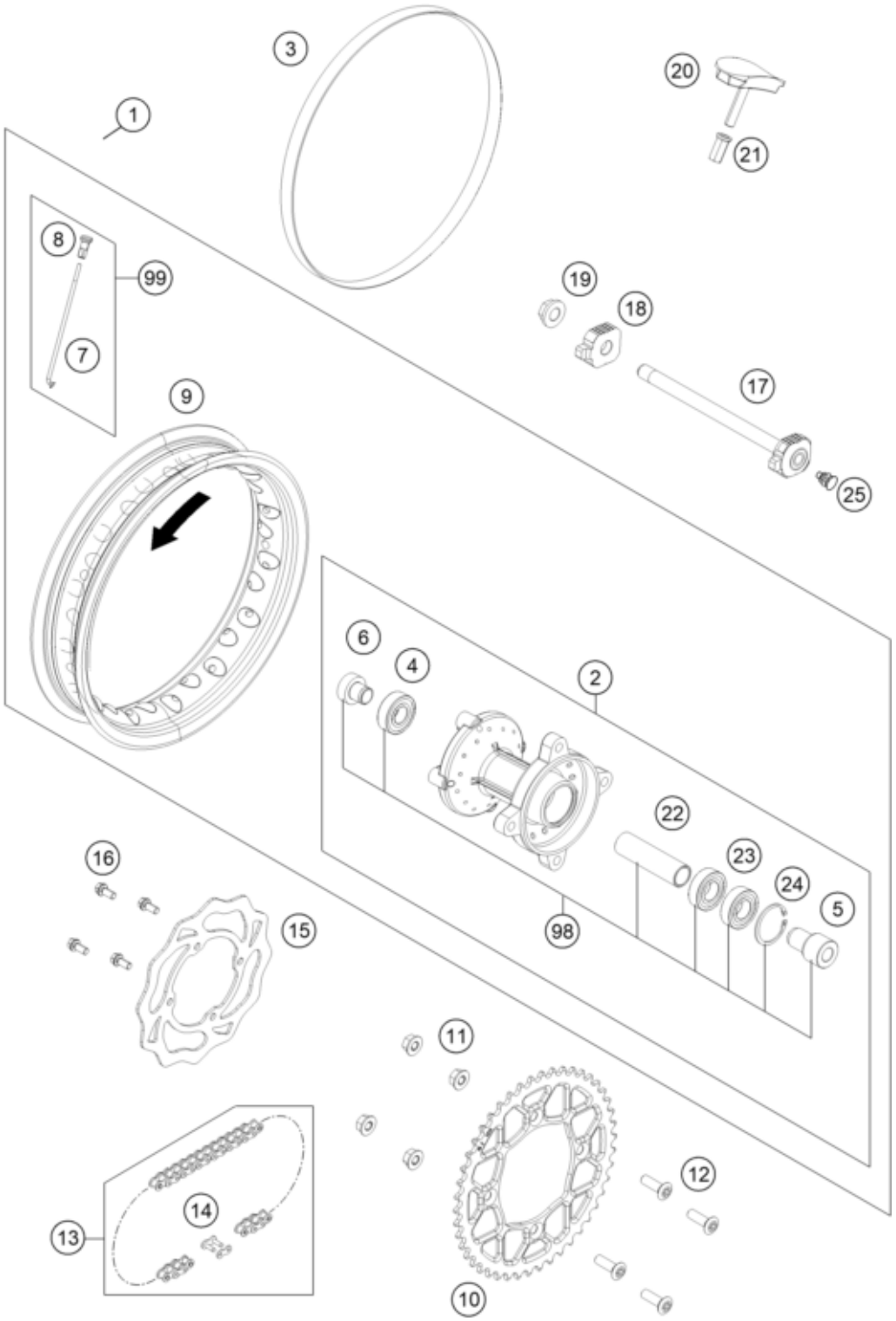

Pos	Part Number	Description	Additional Text	Quantity
1	45310001044	Rearwheel cpl. 50SX-Mini 2018		1.00
2	45210010144	REAR WHEEL HUB CPL. 50SX 2015		1.00
3	45009073000	RIM BAND 10" 22MM		1.00
4	0625062028	BALL BEARING 6202-2RSH/C3		1.00
5	45210013100	SPACER BUSHING LEFT 2015		1.00
6	45210014000	SPACER BUSHING REAR R/S		1.00
7	45210071101	SPOKE 3X101 C.113°		28.00
8	46210072000	SPOKE NIPPLE ALU		28.00
9	4521007020033	Rear rim 1,6x10"		1.00

10	45410051045	Sprocket 45Z		0.00
10	45410051046	Rear sprocket 46 teeth		1.00
10	45410051047	Sprocket 47Z		0.00
11	54310086200	Self locking nut M8 10.9		4.00
12	0019080266S	COUNTER-SUNK SCREW ISA45 M8X26	ONLY FOR 78003023081	4.00
13	45110265104	RACING CHAIN 1/2X3/16" 50 SX	104 ROLLS	1.00
14	45110266000	CONNECTING LINK 1/2X3/16" 90R		1.00
15	45209060000	BRAKE DISC FRONT JUN/SEN 09		1.00
16	59009062016	SPECIAL SCREW M6X16 WS=8 10.9		4.00
17	45410085044	Rear wheel spindle cmpl.		1.00
18	45410084000	Chain tension adjuster right		1.00
19	49030021100	Collar nut, M12x1, right		1.00
20	45110090000	Rim lock 2004		1.00
21	77110090050	NUT FOR WHEEL HOLDER		1.00
22	45210011100	BEARING DISTANCE TUBE 2015		1.00
23	0625060037	GR.BALL BEAR. 6003-2RSH/C3HMTF		2.00
24	0472035150	CIRCLIP DIN0472-35X1,5		1.00
25	50210086000	Plug SFL16		1.00
98	45210015100	wheel bearing repair kit		0.00
99	00050000969	SPOKE KIT REAR 10"		1.00