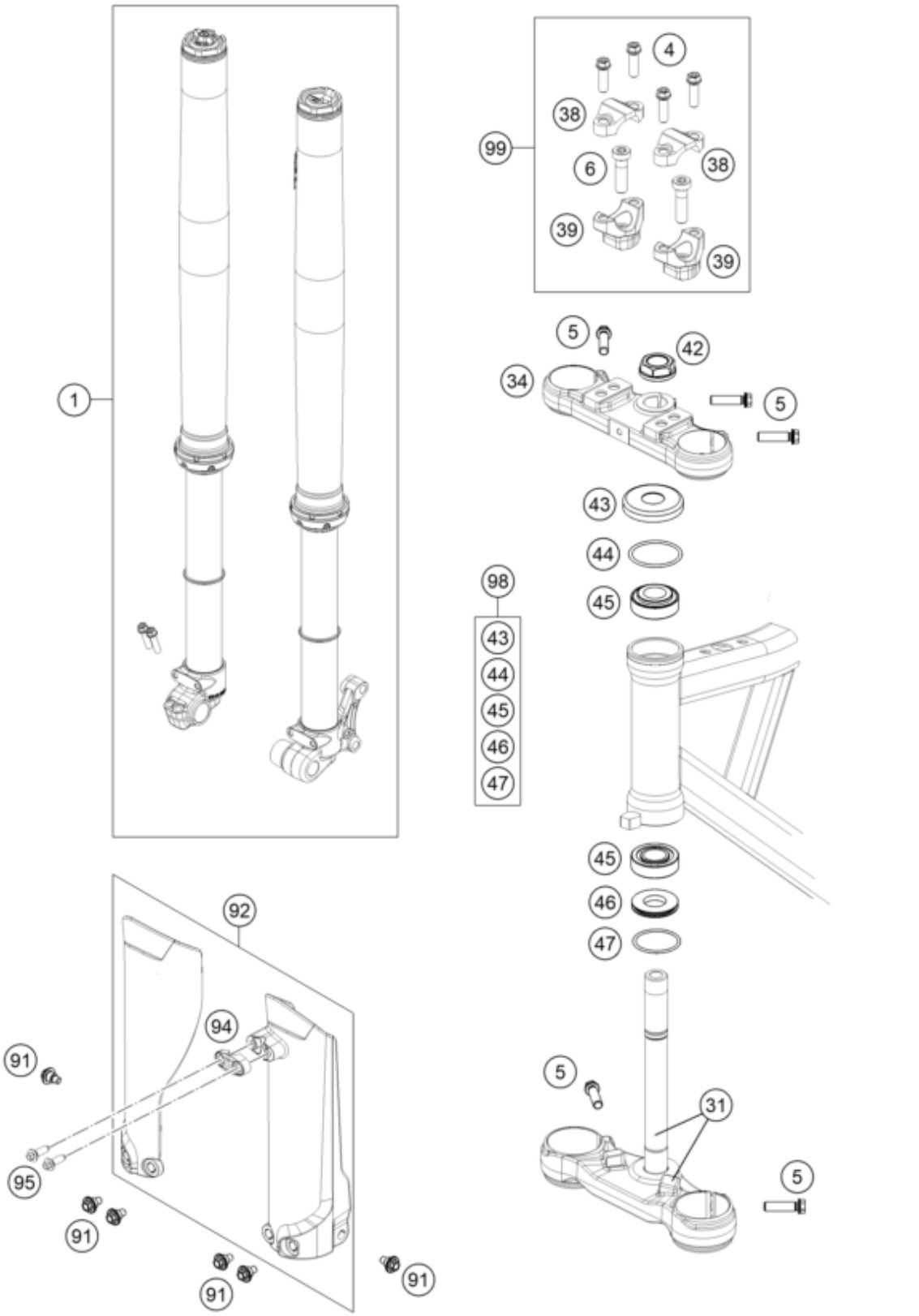

Pos	Part Number	Description	Additional Text	Quantity
1	07186U0201	Fork 50 SX/TC/Mini E 21		1.00
4	0025080256	HH collar screw M8x25	A400C102Z106102	4.00
5	0025080306	HH collar screw M8x30		5.00
6	0032100356S	AH-COLLAR SCREW M10X35 ISA45		2.00
31	45301032022	Bottom triple clamp, complete,		1.00
34	45301034022	Top triple clamp		1.00
38	77201038000	HANDLEBAR CLAMP 28MM		2.00

39	59401039032	Handlebar mount D28mm-H32mm		0.00
39	59401039037	Handlebar mount D28mm-H37mm		2.00
39	59401039042	Handlebar mount D28mm-H42mm		0.00
39	59401039047	HANDLEB.SUPP. D=28MM H=47MM 05		0.00
42	59030029000	HH NUT M20X1,5 WS=27 RIGHT	SX RACING	1.00
43	49001086000	COVERING CAP		1.00
44	0770021300	O-ring 40.94X2.62 NBR70		1.00
45	49001081000	TAPERED ROLLER BEARING 32004X		2.00
46	46001086000	PROTECTION RING 20,1X39X5		1.00
47	0770360030	O-RING 36,00X3,00 NBR		1.00
91	59001092050	SPECIAL SCREW M6X12,5 WS=8		6.00
92	46301094000ABB	Fork protection Kit SX-E	with Decal	1.00
94	46301085000AB	Clamp brake hose		1.00
95	0017060206	SCREW F. PLASTIC K60X20AL SW6		2.00
98	00050000931	STEARING HEAD REP. KIT MINI		0.00
99	00050000921	HANDLEBAR SUPPORT KIT D28/H37		1.00