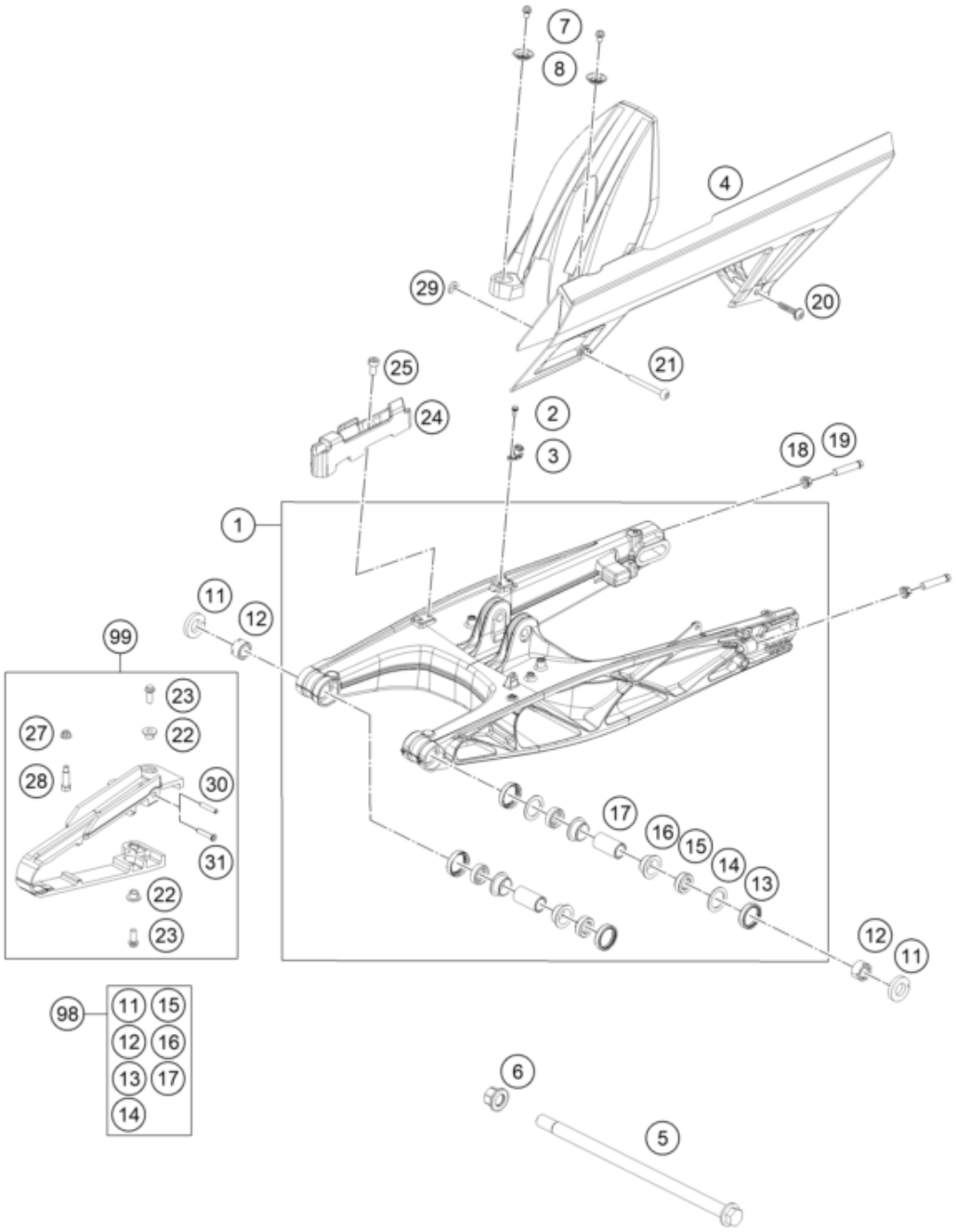

Pos	Part Number	Description	Additional Text	Quantity
1	28104030044BA	Swing Arm Sub Assy Duke 390 MY		1.00
2	J011050133	HH COLLAR SCREW M5X13 SW8		1.00
3	90113047000	brake hose guide		1.00
4	93004060100	Chain cover		1.00
5	90104037000	Shaft swing arm L=299mm		1.00
6	90104038000	FLANGED NUT M14X1.5		1.00
7	J025060081	Hex collar screw M6X8		2.00
8	93004051000	Supporting shell		2.00
11	93004042000	Special wahser		2.00
12	90104046000	swingarm adjusting ring		2.00
13	90104034001	OIL SEAL RING 25X32X7		4.00
14	90104036000	Thrust washer 22.2x31.7x1		2.00
15	90104034000	cup for radial shaft seal		4.00
16	90104031000	Igus plain bearing		4.00

17	90104032000	sleeve bushing 15.1x20x38		2.00
18	90104010002	flanged hex nut M10x1.25 WS13		2.00
19	90104040000	BOLT HEX M10X1.25X50 WS10		2.00
20	93004064000	Plastic screw 6x30		1.00
21	93004065000	hexagon socket screw M5X0.8X55		1.00
22	90604062000	chain slider bushing		2.00
23	J025060169	HH COLLAR SCREW M6X16 SW8		2.00
24	93013047000	Support		1.00
25	J912050102	bolt soket-m5x0.8xl10xcl10.9xb		1.00
27	90204060001	HH COLLAR NUT		1.00
28	90104040100	screw M5x0.8x30		1.00
29	90504067000	WASHER CHAIN SLIDING GUARD		1.00
30	90104070020	SLEEVE CHAIN GUARD		1.00
31	90904070020	SLEEVE CHAIN GUARD		1.00
98	90104230010	SWINGARM REP. KIT 11-17		0.00
99	90104066210	CHAIN GUARD KIT 250/390		0.00