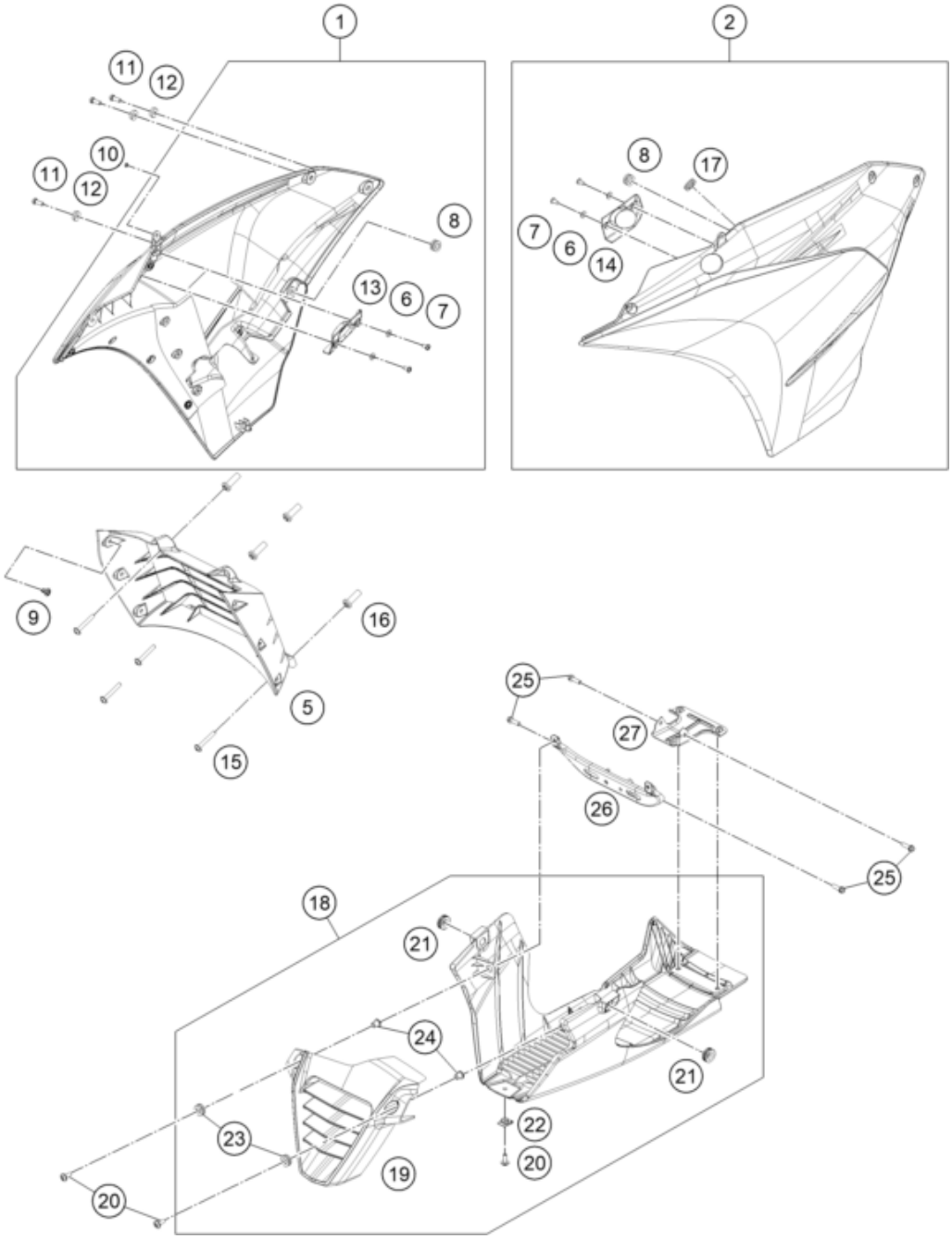

Pos	Part Number	Description	Additional Text	Quantity
1	93808051044AB	ASLY SD FAIRING RH RC390 MY20		1.00
2	93808050044AB	ASLY SD FAIRING LH RC390 MY20		1.00
5	90508011000	AIR INTAKE		1.00
6	90514007010	WASHER D=5,5 BLACK		4.00
7	90508041010	SCREW K50X12		4.00
8	90507040001	RUBBER SLEEVE		4.00
9	90114062001	EXPANDING RIVET		6.00
10	90508006004	SOCKET HEAD BOLT M6X1X8		2.00
11	90808043001	BOLT SOCKET M6X1XL		6.00
12	90508046000	SPECIAL WASHER		6.00
13	90508054050	FLASHER BLIND COVER R/S		1.00
14	90508054000	FLASHER BLIND COVER L/S		1.00
15	90508006002	AH SCREW M6X42		4.00

16	90503007001	BUSH RADIATOR MTG		4.00
17	90508010060	GROMMET		1.00
18	9380802003330	Belly pan assly		1.00
19	93808020100	BELLY PAN		1.00
20	90808043000	SPECIAL SCREW M6X1X16		3.00
21	90508055010	GROMMET SIDE FAIRING		2.00
22	90103097000	clip nut		1.00
23	93808026100	GROMMET BELLY PAN		2.00
24	93808027000	SLEEVE		2.00
25	J025060203	HH COLLAR SCREW M6X20 SW10		4.00
26	93808026001	BRACKET BELLY PAN FRONT		1.00
27	93808027001	BRACKET BELLY PAN REAR		1.00