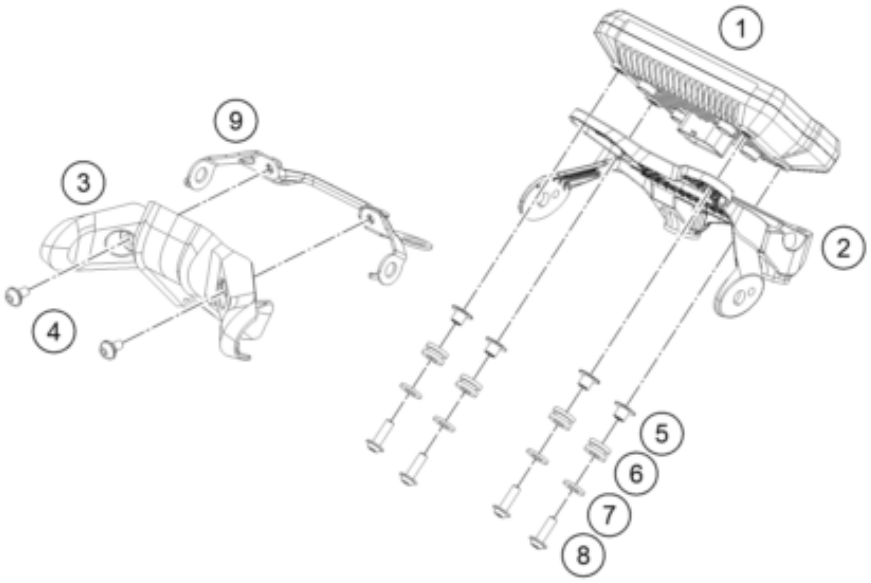


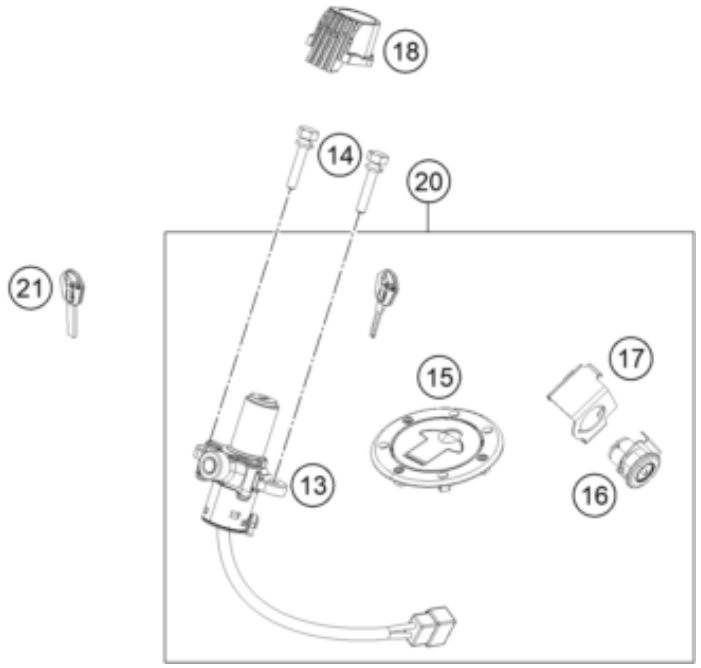


| Pos | Part Number | Description | Additional Text | Quantity |
|---|---|---|---|---|
| 1 | 93314069100 | Dashboard | | 1.00 |
| 2 | 93014064000 | Holder handsbar CUM TFT speedo | | 1.00 |
| 3 | 93014064100 | Back cover TFT holder | | 1.00 |
| 4 | 93008020060 | Screw M6X1X9 | | 2.00 |
| 5 | 93014062010 | Collar TFT speedo small | | 4.00 |
| 6 | 90507040001 | RUBBER SLEEVE | | 4.00 |
| 7 | 93308015010 | Washer, license plate holder s | | 4.00 |
| 8 | J031060183 | Roundhead screw M5X18 | | 4.00 |
| 9 | 93014064200 | Bracket TFT Cover black | | 1.00 |
| 13 | 93011066044 | Ignition lock complete | | 1.00 |
| 14 | 93011064100 | Special screw for ignition loc | | 2.00 |
| 15 | 93807008000 | Fuel tank cap | | 1.00 |
| 16 | 90107050050 | SEAT LOCK | | 1.00 |

| | | | | |
|---|---|---|---|---|
| 17 | 93007051000 | Retaining bracket | | 1.00 |
| 18 | 93011066010 | Positioning rubber | | 1.00 |
| 20 | 90211066144 | Lock set cpl. | | 1.00 |
| 21 | 90111067100 | BLANK KEY 125/200 DUKE | | 0.00 |
| 21 | 90111067000 | KEY | | 1.00 |