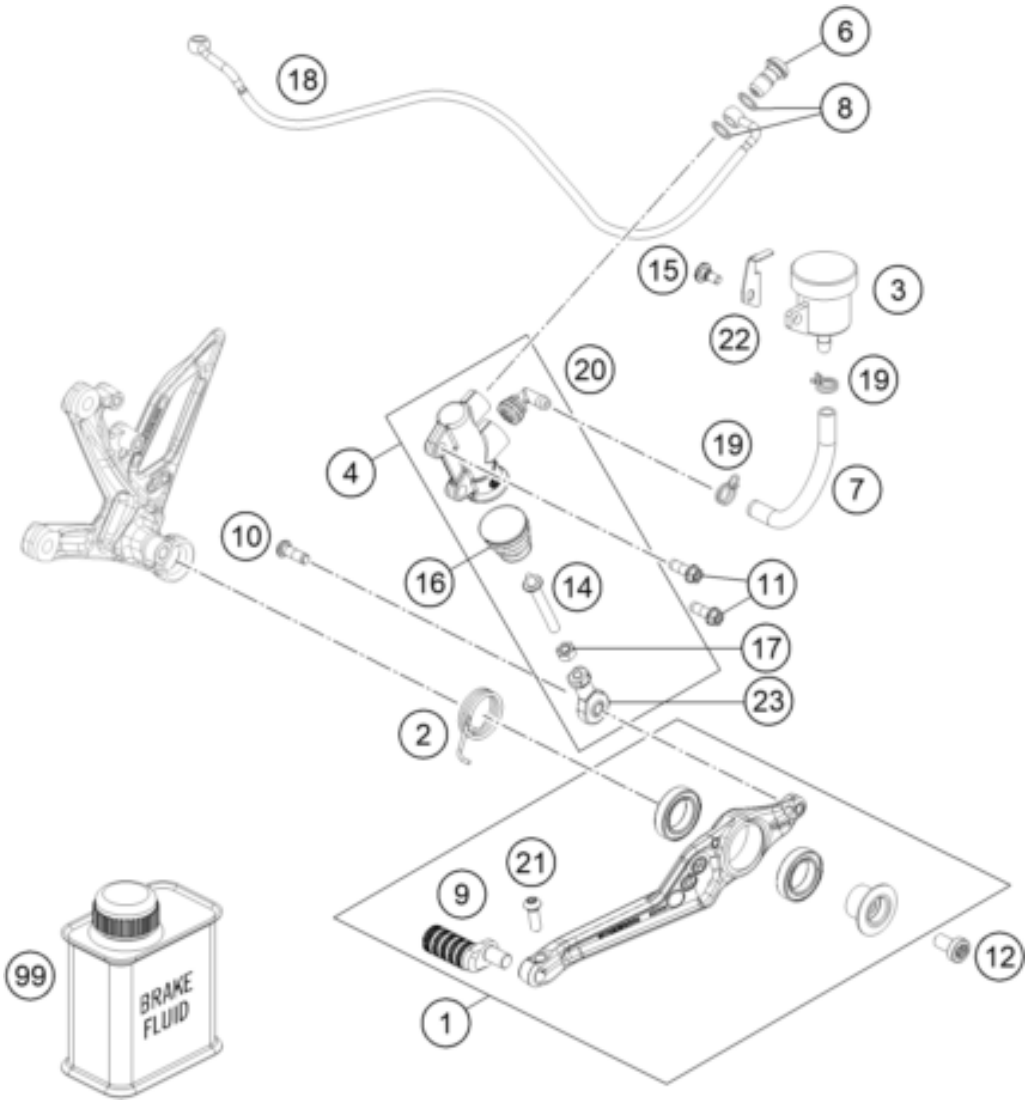

Pos	Part Number	Description	Additional Text	Quantity
1	61713050044C1	Rear brake lever cmpl.		1.00
2	61713052000	Leg spring		1.00
3	61713069044	Brake fluid reservoir cmpl.		1.00
4	61713060000C1	Rear master cylinder		1.00
6	62113020100	banjo bolt M10x1x19.5		1.00
7	58007016101	HOSE FOR RESERVOIR 6X1,5		1.00
8	0603100141	sealing ring DIN 7603 10x14x1	ONLY FOR LC4 ADVENTURE	2.00
9	61713051000C1	Footbrake lever step plate		1.00
10	0738060185S	oval head screw M6x18 A2-70 S		1.00
11	0025060166S	HH collar screw M6x16 TX30 SL		2.00
12	0035080156S	AH-COLLAR SCREW M8X15 TORX45		1.00
14	60313056044	PUSH ROD CPL.		1.00
15	69013099150	Screw, reservoir		1.00
16	54513151000	RUBBER SLEEVE		1.00
17	0926080003	STOP NUT DIN6926 M8 SS		1.00
18	61742002000	Brake line rear master cylinde		1.00
19	58007017000	YDNAC-clamp 10101 (10.4MM)	300 TPI Erzbergrodeo	2.00
20	54513155000	ANGLE PIECE		1.00
21	0738060185	Round head scr. ISR M6x18-A2-7		1.00

22	61713069020	Lock washer, brake fluid reser		1.00
23	54603069000	SWIVEL HEAD M6 FOOT BRAKE LEV.		1.00
99	00062030000	Brake fluid DOT5.1 0,25L		1.00