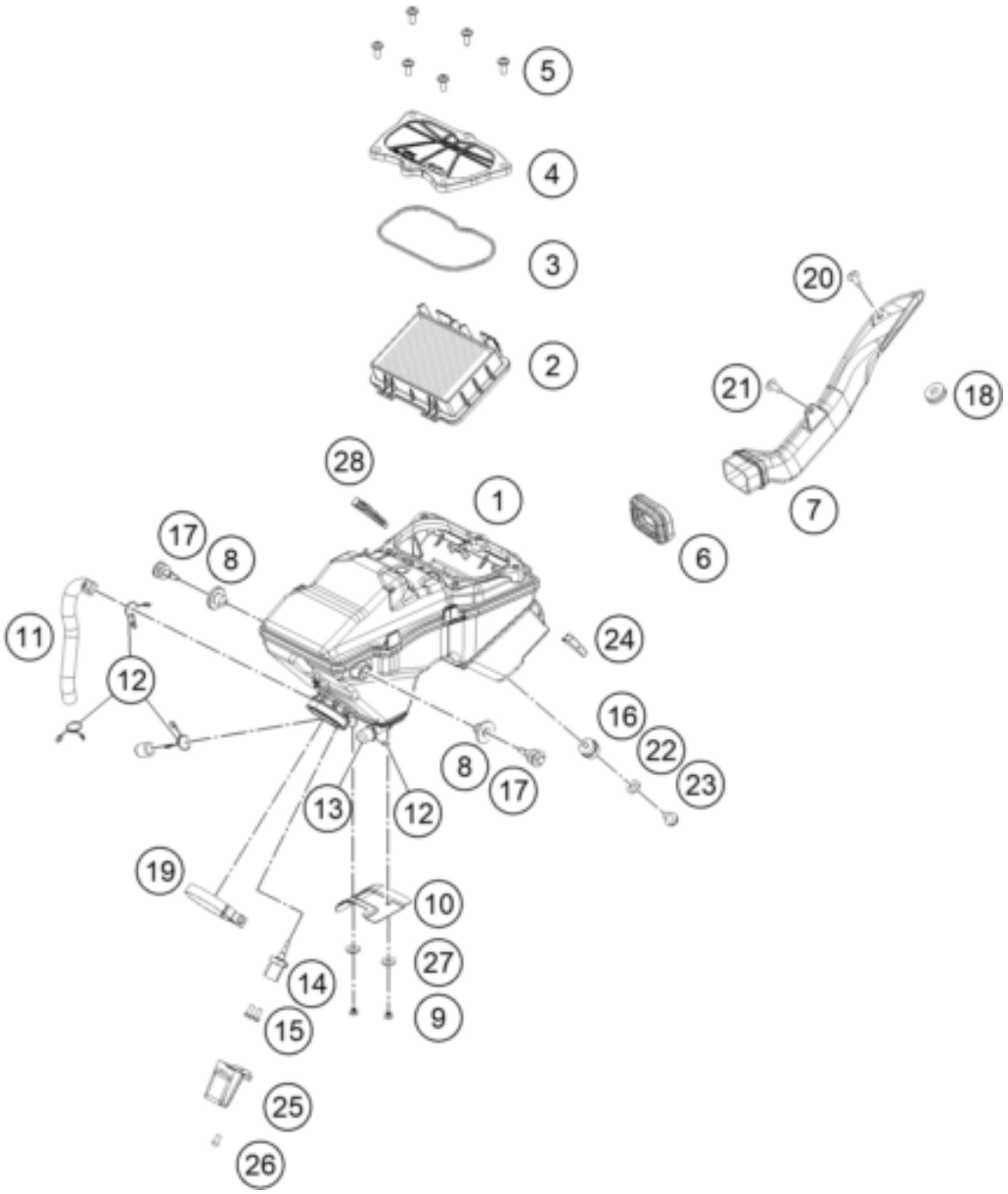

Pos	Part Number	Description	Additional Text	Quantity
1	93006001044	Air filter box complete		1.00
2	93006015000	FILTER		1.00
3	93006020050	Seal		1.00
4	93006002000	Air filter box cover		1.00
5	93006039000	Flat-head screw M6		4.00
6	93006001060	Carburetor connection boot		1.00
7	93006040000	Duct dirty side		1.00
8	93006001080	Damping rubber		2.00
9	J031050103	Screw Truss M5X0.8		2.00
10	93006001070	Heat protection		1.00
11	93030087200	Engine vent hose		1.00
12	90130087001	HOSE CLAMP		4.00
13	93030089000	Plug		1.00
14	93041080000	Intake air temperature sensor		1.00
15	J005050126	Lens head screw M5X12		2.00
16	90106001007	SILENT BLOCK AIRFILTER		1.00

17	93007046050	Screw		2.00
18	93008019010	Rubber bushing		1.00
19	90106027100	HOSE CLAMP		1.00
20	J031050163	CHEESE-HEAD SCREW M5X16		1.00
21	J031050166	Screw truss M5X16		1.00
22	J125060004	Washer, M6		1.00
23	J026060083	HH COLLAR SCREW M6X8 SW10		1.00
24	93006001015	Rubber cowl pad		1.00
25	93041080060	SENSOR COVER		1.00
26	J005050101	Oval head screw M5X10		1.00
27	90505090050	WASHER ASBESTOS		2.00
28	93006021000	Distance piece air filter box		1.00