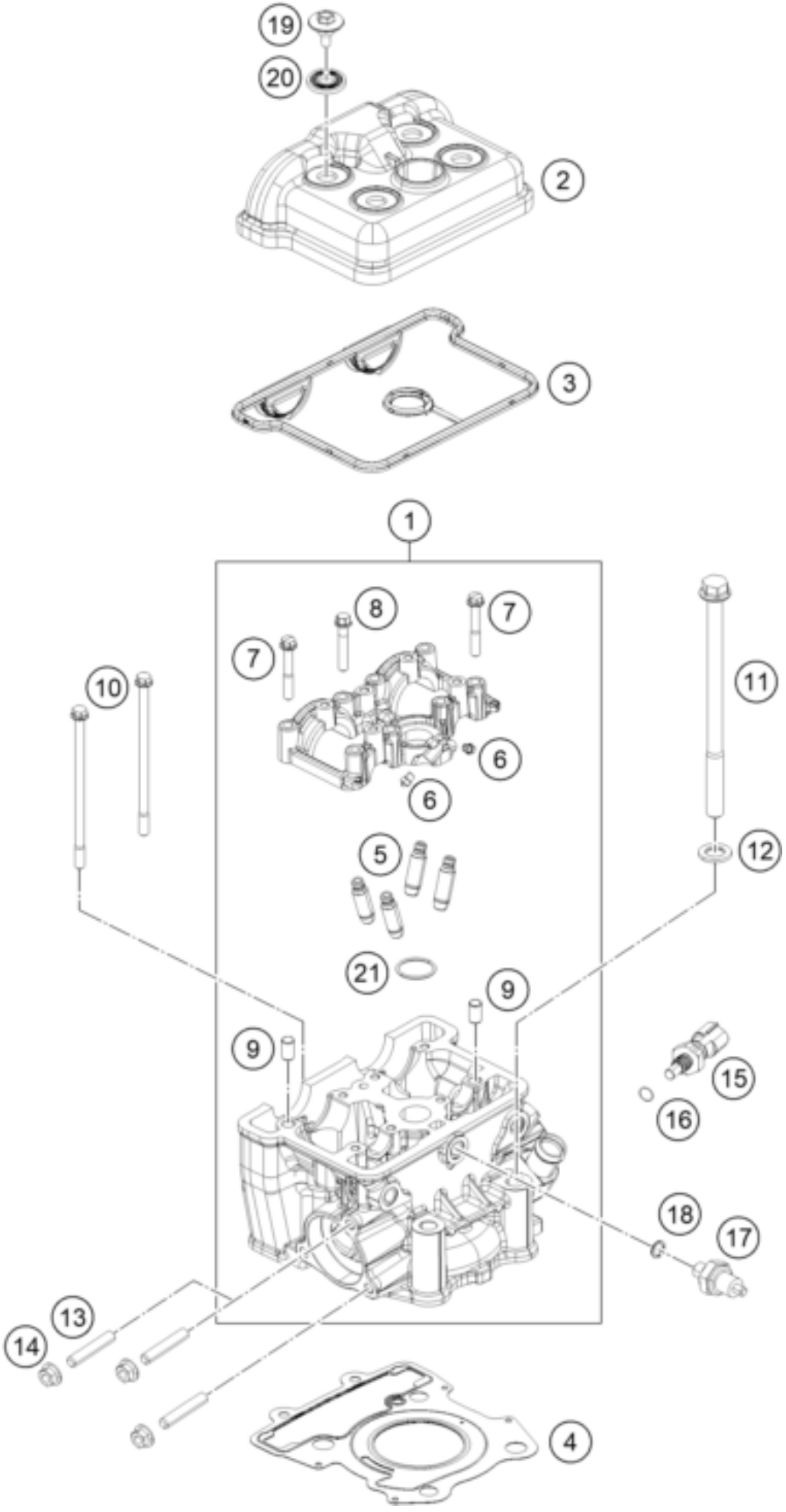
19
20
2
3
1
8
7
7
10
11
6
6
5
12
21
9
9
15
16
18
17
13
14
4

Pos	Part Number	Description	Additional Text	Quantity
1	90136020190	CYLINDER HEAD WITH CAMHOLDER		1.00
2	93336052001	Valve mechanism cover		1.00
3	93536053000	Valve cover gasket		1.00
4	90130036000	CYLINDER HEAD GASKET		1.00
5	90136025000	VALVE GUIDE		4.00
6	90130064000	OIL JET		4.00
7	J025060402	HH-COLLAR SCREW M6X40 WS10		2.00
8	J025060352	bolt-flanged-small		6.00
9	90130024000	PIN DOWEL 8X6,4X14MM	14mm length	2.00
10	90136020005	COLLAR SCREW M6		2.00
11	90136020003	HH COLLAR SCREW 10X147,5		4.00
12	90130080000	WASHER 11,2X20X2		4.00
13	90136020001	STUD M8		3.00
14	90136038000	FLANGED NUT M8 H7,5 WS12		3.00
15	90135047000	TEMPERATURE SENSOR		1.00
16	J770000817800	O-ring 7.65x1.78		1.00
17	90138091000	OIL PRESSURE SENSOR		1.00
18	90138091001	O-RING		1.00
19	90136052020	VALVE COVER SCREW		4.00
20	90136052010	DECOUPLING ELEMENT		4.00
21	J770023019	O-RING 23,7X1,9		1.00