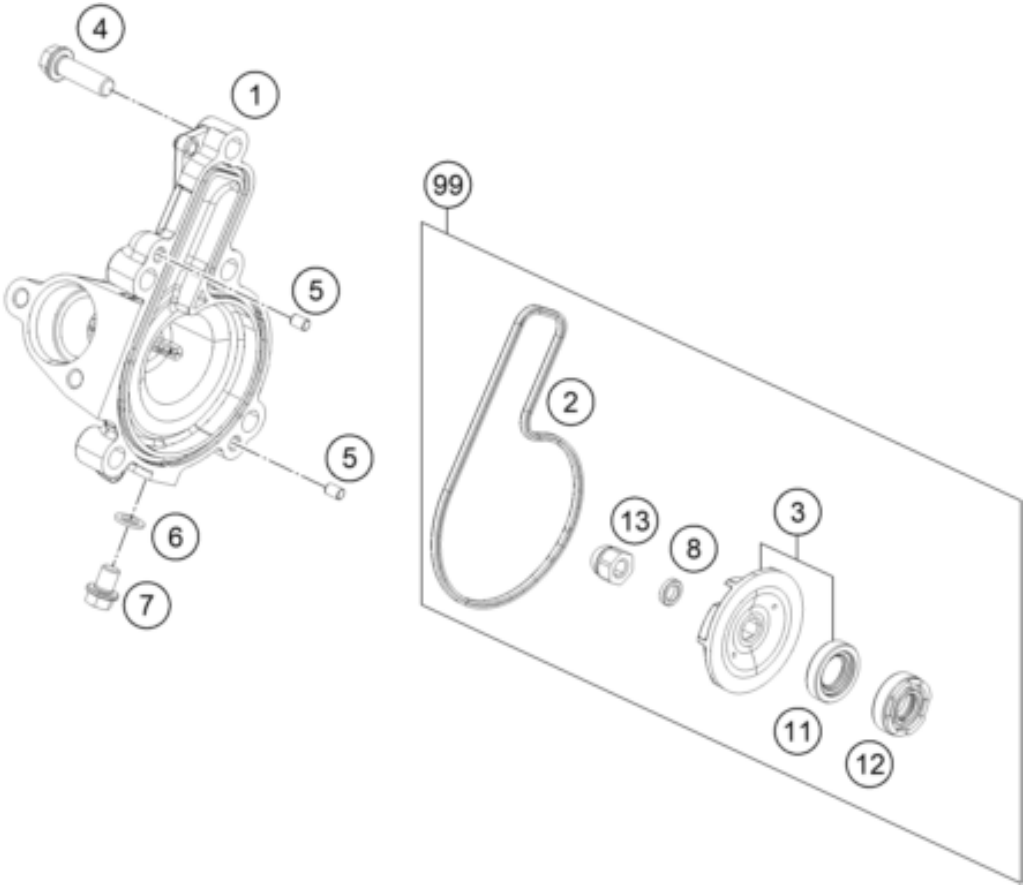

Pos	Part Number	Description	Additional Text	Quantity
1	91235052000	WATER PUMP COVER		1.00
2	90135053000	WATER PUMP COVER GASKET		1.00
3	90135055044	KIT WATER PUMP ROTOR & SEAL		1.00
4	J025060224	Hexagonal bolt M6x22		5.00
5	90134013000	Parallel pin		2.00
6	J603061001	COPPER GASKET		1.00
7	J025060104	Hex collar screw M6X10		1.00
8	90130055006	SPACER SHIM		1.00
11	J760122455	SHAFT SEALING RING 12X24X5,5		1.00
12	0760122406	Shaft seal ring 12x24x6		1.00
13	90135058000	DOME NUT WAPU-WHEEL		1.00
99	90135055210	Water pump rep. kit duke		0.00