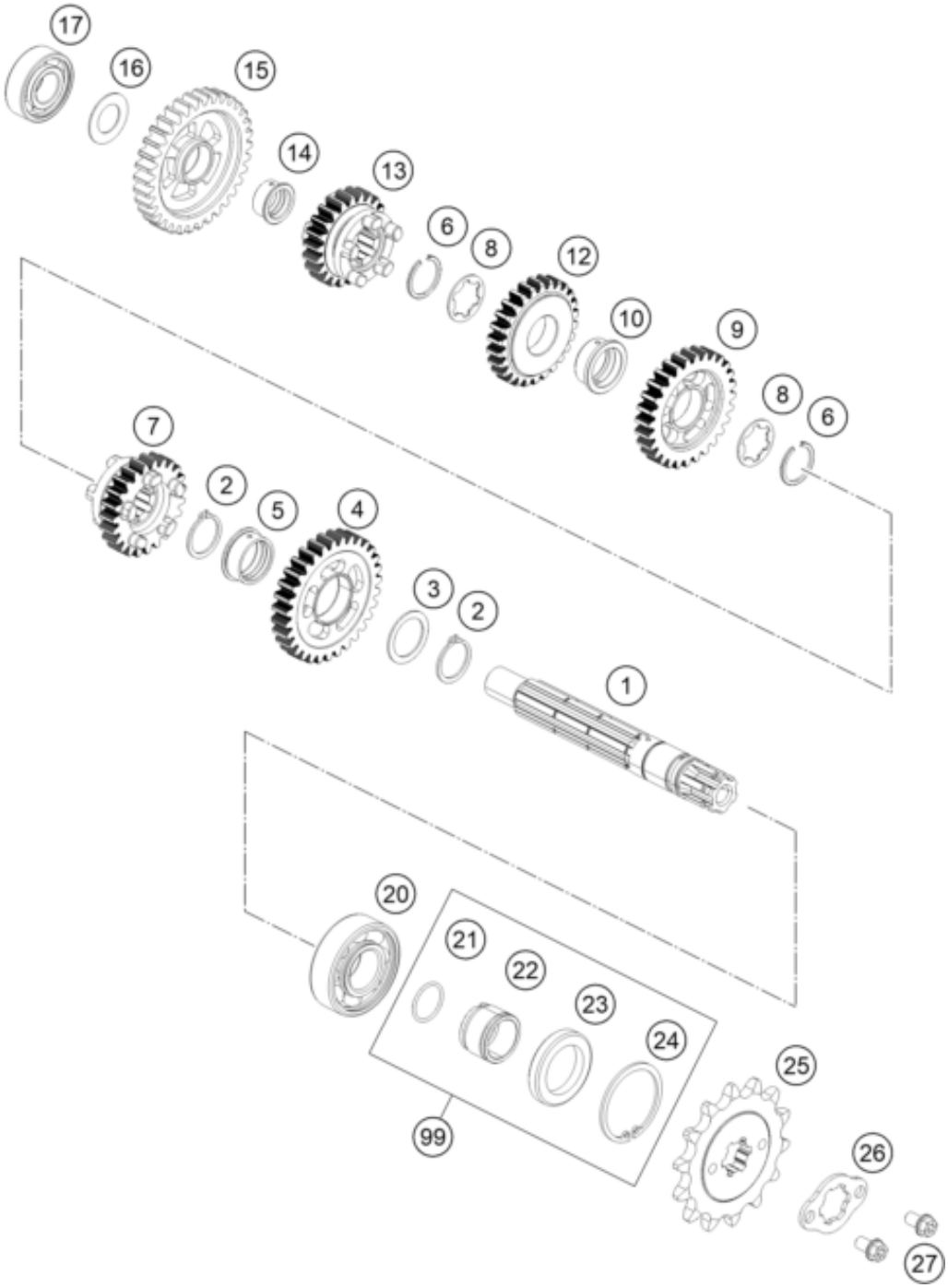

Pos	Part Number	Description	Additional Text	Quantity
1	93533010000	Shaft Output-Plug		1.00
2	J471020121	CIRCLIP 20X1,2		2.00
3	90133034000	WASHER 20,2X27X1		1.00
4	90633012100	gear driven second		1.00
5	90133001003	BUSHING		1.00
6	J471020122	CIRCLIP 20X1,2		2.00
7	93033015000	Transmission gear wheel, fifth		1.00
8	J900001602600	Washer		1.00
9	93033013000	Transmission gear wheel, third		1.00
10	J900002001100	Collar bushing		1.00
12	90133014000	COUNTERWHEEL 4. GEAR		1.00
13	93033016000	Transmission gear wheel, sixth		1.00

14	90133001009	BUSHING		1.00
15	90133011000	COUNTERWHEEL 1. GEAR		1.00
16	J125150006	Washer 15X26X0,8		1.00
17	90130004003	BALL BEARING 15X35X11		1.00
20	J625062041	BALL BEARING 6204-Z/HN3		1.00
21	J770017515	O-RING 17,5X1,5		1.00
22	90133030000	COLLAR SPROCKET		1.00
23	90230077000	OIL SEAL OUTPUT SHAFT		1.00
24	J472037150	CIRCLIP 37X1,5		1.00
25	90133029014	SPROCKET 14T.		1.00
26	90110049000	plate drive sprocket		1.00
27	90110057000	BOLT M6X10		2.00
99	00050000982	COUNTER SHAFT REP.KIT125DUKE		0.00