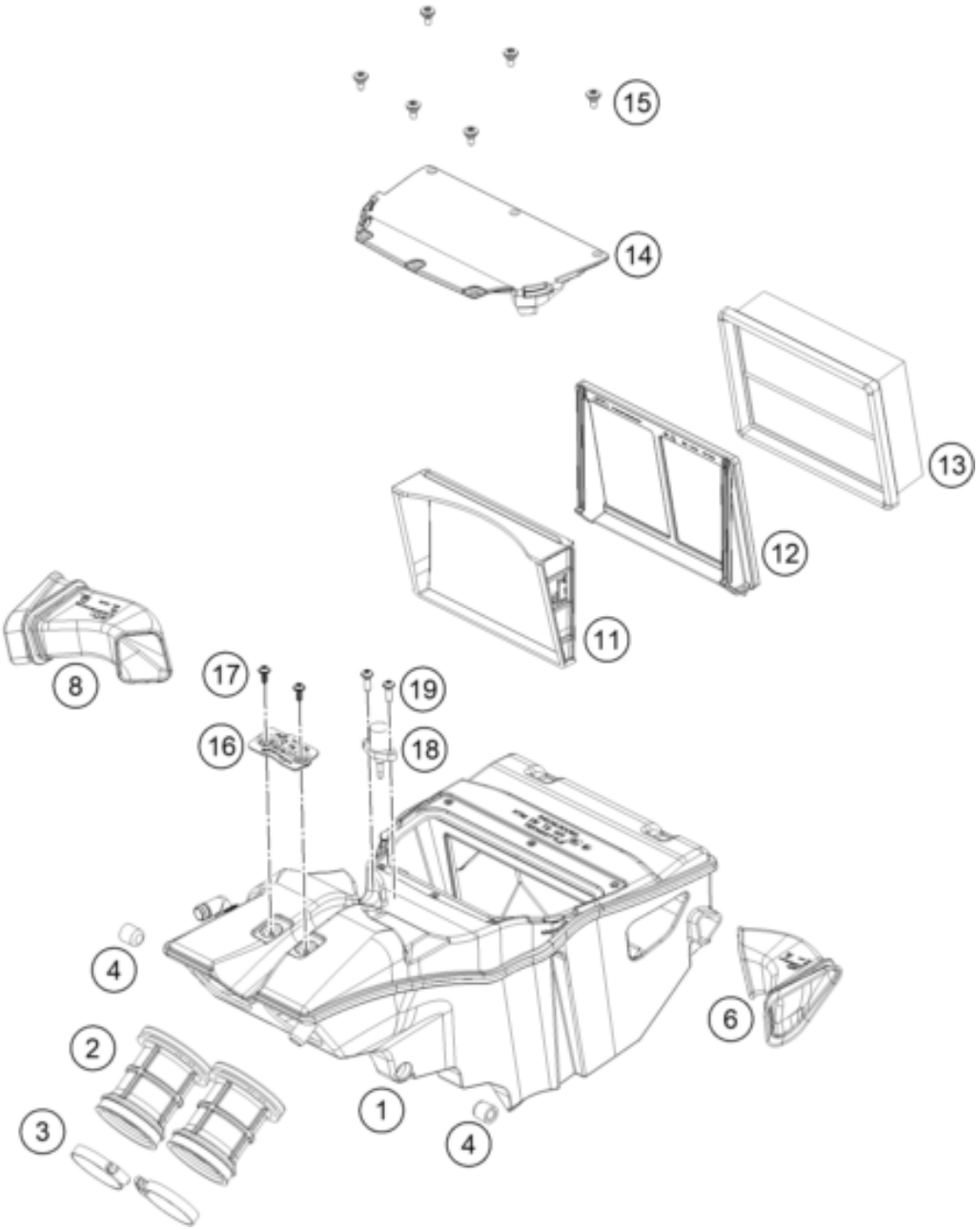


| Pos | Part Number | Description | Additional Text | Quantity |
|---|---|---|---|---|
| 1 | 64106001100 | Air filter box | | 1.00 |
| 2 | 63606026000 | Intake trumpet | | 2.00 |
| 3 | 77236048000 | Hose clip GEMI 58 | | 2.00 |
| 4 | 76006014000 | rubber grommet | | 2.00 |
| 6 | 64106040000 | Spout left | | 1.00 |
| 8 | 64106041000 | Spout right | | 1.00 |
| 11 | 64106001050 | filter frame wedge | | 1.00 |
| 12 | 64106016000 | filter frame | | 1.00 |
| 13 | 64106015000 | Air Filter | | 1.00 |
| 14 | 64106002000 | Airbox lid | | 1.00 |
| 15 | 69008021160 | special screw M5x12 | | 6.00 |
| 16 | 64106001030 | cable holder | | 1.00 |
| 17 | 0081050121 | EJOT PT screw K50x12 | only for US and SixDays | 2.00 |
| 18 | 61041080000 | AMBIENT-AIR TEMPERATURE SENSOR | | 1.00 |
| 19 | 0081050161 | EJOT PT SCREW K50X16 1451 | | 2.00 |