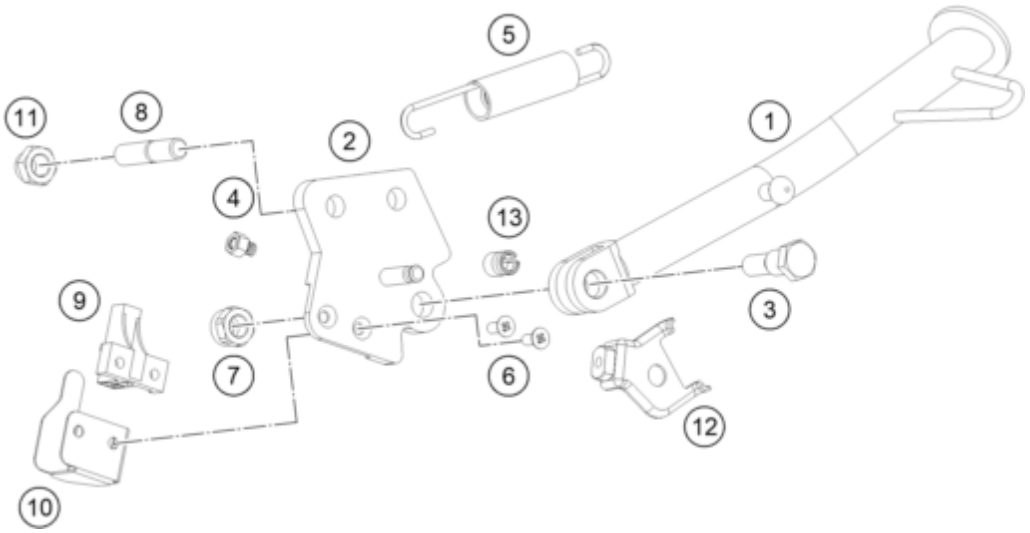

Pos	Part Number	Description	Additional Text	Quantity
1	93003023100	Side stand		1.00
2	93003026100	Side stand bracket		1.00
3	90103027000	SCREW F. SIDE STAND		1.00
4	93503029000	Magnet bracket		1.00
5	90603024000	SIDE STAND SPRING		1.00
6	J900000501200	screw csk cros-m5x0.8xl12xbrig		2.00
7	J982101253	SELF L. NUT M10X1,25 H11 WS17		1.00
8	93003027000	bolt stud-M10X1.25XL20XBRXPREC		2.00
9	93511045000	SWITCH SIDE STAND	L-PART	1.00
10	28111046000	Shield switch stand side		1.00
11	93003034000	nut U flang-M10X1.25XHT.8.5XBR		2.00
12	95803034000	BRACKET HOLDER MAGNET		1.00
13	90111040100	Bushing		1.00