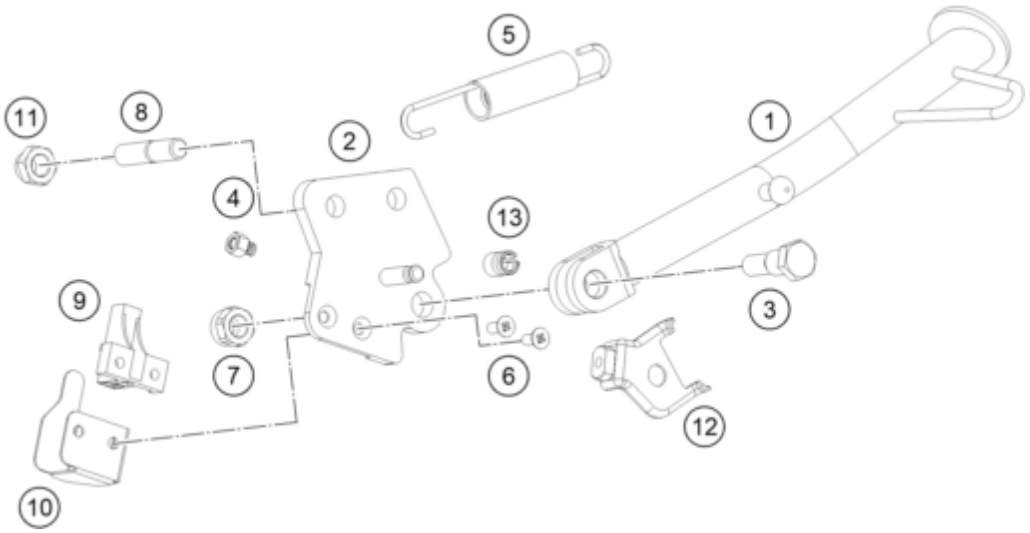


| Pos | Part Number | Description | Additional Text | Quantity |
|---|---|---|---|---|
| 1 | 93003023100 | Side stand | | 1.00 |
| 2 | 93003026100 | Side stand bracket | | 1.00 |
| 3 | 90103027000 | SCREW F. SIDE STAND | | 1.00 |
| 4 | 93503029000 | Magnet bracket | | 1.00 |
| 5 | 90603024000 | SIDE STAND SPRING | | 1.00 |
| 6 | J900000501200 | screw csk cros-m5x0.8xl12xbrig | | 2.00 |
| 7 | J982101253 | SELF L. NUT M10X1,25 H11 WS17 | | 1.00 |
| 8 | 93003027000 | bolt stud-M10X1.25XL20XBRXPREC | | 2.00 |
| 9 | 93511045000 | SWITCH SIDE STAND | L-PART | 1.00 |
| 10 | 28111046000 | Shield switch stand side | | 1.00 |
| 11 | 93003034000 | nut U flang-M10X1.25XHT.8.5XBR | | 2.00 |
| 12 | 95803034000 | BRACKET HOLDER MAGNET | | 1.00 |
| 13 | 90111040100 | Bushing | | 1.00 |