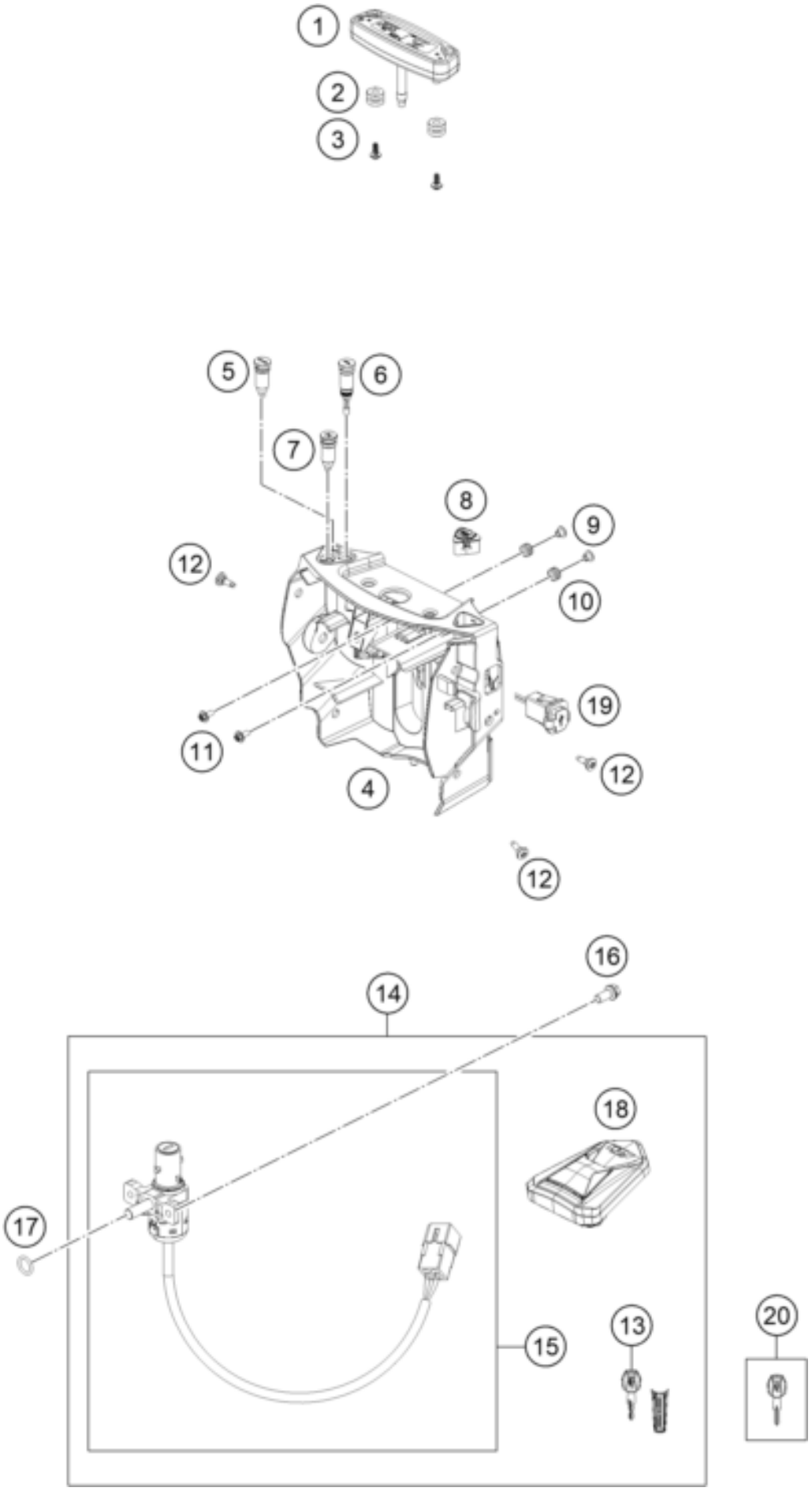

Pos	Part Number	Description	Additional Text	Quantity

1	27014069200	Dashboard		1.00
2	58214069051	rubber grommet 16x10.8x3		2.00
3	0081645121	EJOT DELTA PT SCREW 45X12-Z		2.00
4	76914060000	Combination instrument, bracke		1.00
5	27014081000	FLASHER CONTROL LIGHT		1.00
6	76914082000	Oil pressure warning indicator		1.00
7	27014083000	neutral led pilot assembly		1.00
8	60142070100	SWITCH ABS		1.00
9	75014010050	COLLAR BUSHING 6,1X8,1X14X8 07		2.00
10	31008060000	rubber grommet D=8mm open		2.00
11	0024060156	HH collar screw M6x15 TX30	ONLY USA	2.00
12	69008021160	special screw M5x12		3.00
13	76911067000	KTM ignition key		0.00
14	76911066044	Lock kit cmpl.		1.00
15	27011066100	Ignition Switch		1.00
16	59009062013	SPECIAL SCREW M6X13 WS=8 10.9		2.00
17	0770100020	o-ring 10.00x2.00 silicone	ONLY FOR LC4 ADVENTURE	1.00
18	76907008000	Fuel tank cap		1.00
19	64111043000	USB power socket 12 V		1.00
20	76911067010	Spare key		0.00