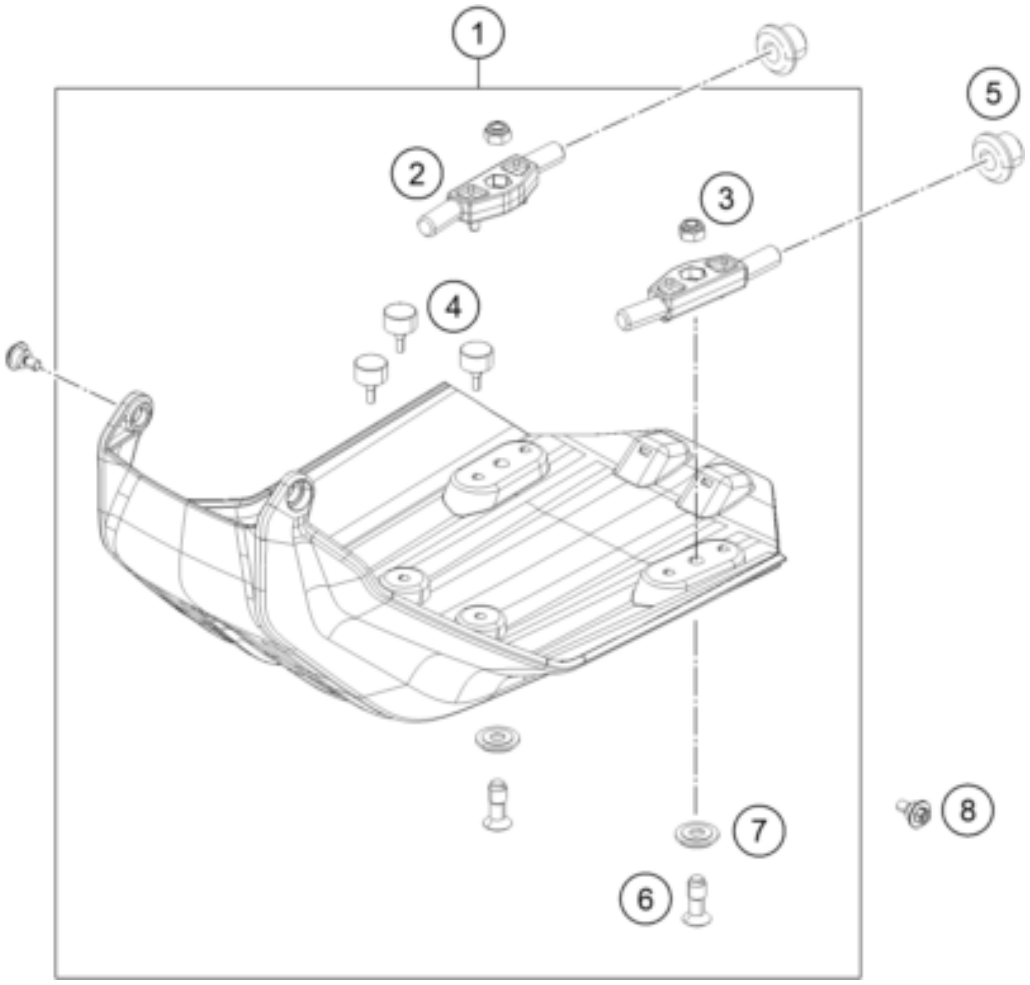

Pos	Part Number	Description	Additional Text	Quantity
1	76903090044	Skid plate cmpl.		1.00
2	76503091000	CARTER SUPORTER		2.00
3	0985080003	SELF LOCKING NUT DIN0985-M 8		2.00
4	75007046010	SEAT RUBBER 10 MM		3.00
5	56401040000	rubber bushing		2.00
6	0019080266S	COUNTER-SUNK SCREW ISA45 M8X26	ONLY FOR 78003023081	2.00
7	58303061000	SPECIAL WASHER ALU 8 X 24 MM		2.00
8	83008100015	Special screw M6x15x5.5		2.00