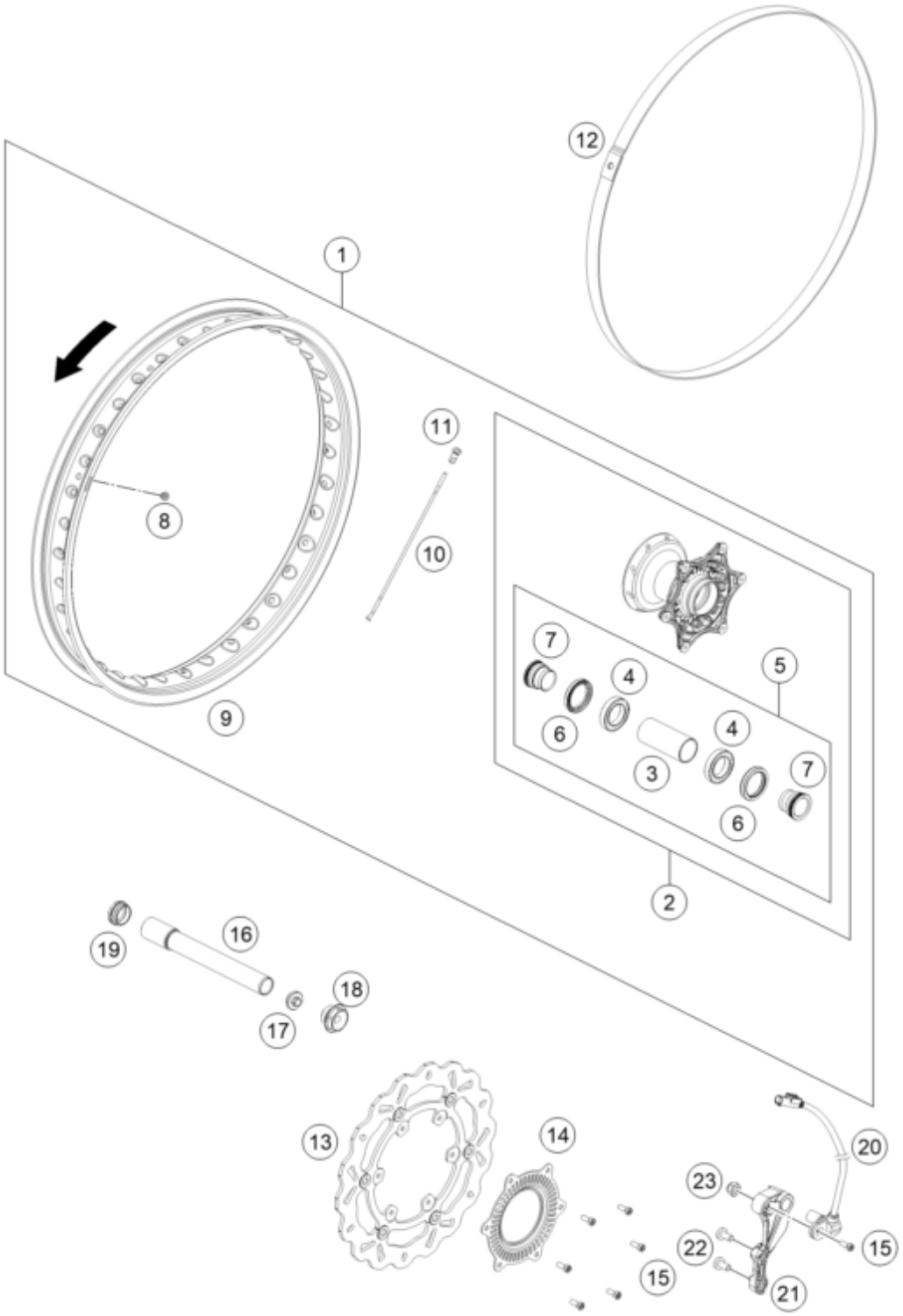

Pos	Part Number	Description	Additional Text	Quantity
1	7650910104430	FRONT WHEEL CPL. 1,85X21" 1		1.00
2	7530901004491	FRONT HUB CPL.		1.00
3	54809011000	BEA.SPACERTUBE 35X2 L=79,4 03		1.00
4	0625069068	Grooved ball bearing 6906		2.00
5	78009015000	wheel bearing repair kit		1.00
6	0760354771	Radial shaft seal 35X47X7 TC		2.00
7	78009012000	SPACER BUSHING F. FR. WHEEL 08		2.00
8	55003135000	PLUG FOR RIM		1.00
9	7650917000030	Front rim 1.85X21" DID 16		1.00
10	75309073226	SPOKE M4,5X226-18" INOX		36.00

11	81210072100	SPOKE NIPPLE QUADRAX M4,5		36.00
12	58409073100	RIM BAND FRONT 2MM 2003		1.00
13	76509260000	FRONT BRAKE DISC D=300MM		1.00
14	60142020100	Front sensor wheel		1.00
15	014580060166S	SHCS ISO 14580 M6x16 SL		7.00
16	77309081100	Wheel spindle, front		1.00
17	54809081070	AUXILIARY SCREW FRONT 06		1.00
18	54809082000	SPINDLE SCREW M24X1,5 WS=27 03		1.00
19	54809081050	PLUG BUSHING WS=27 03		1.00
20	76542025000	ABS-SENSOR		1.00
21	27042024100	SENSOR BRACKET		1.00
22	0018050103	INT. TORX OVAL HEAD M 5X10 8.8		2.00
23	0985060003	Self lock. nut DIN985-M6-A2		1.00