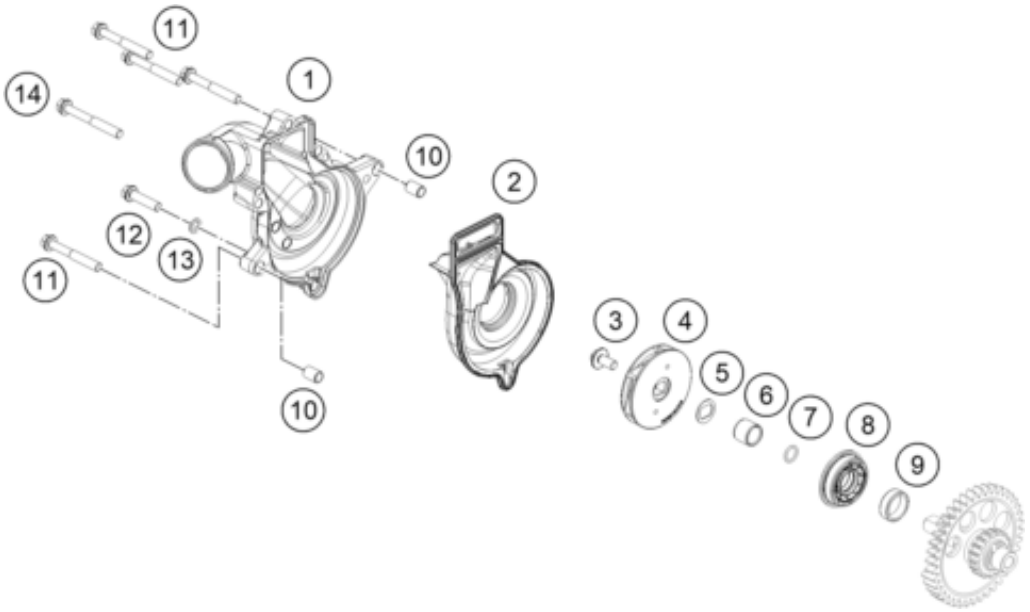

Pos	Part Number	Description	Additional Text	Quantity
1	6173505201041	Water pump cover		1.00
2	61735052030	Water pump cover, insert, cmpl		1.00
3	0024060136S	HH Collar screw M6x13 TX30 SL		1.00
4	60335055100	WATER PUMP WHEEL CPL.		1.00
5	60035055150	double-d washer 16x1 SST		1.00
6	77236072120	Wear bushing 12/15/12,5		1.00
7	0770090015	O-RING 9X1,5 NBR		1.00
8	0760153459	radial shaft seal 34.5x15x9 Du		1.00
9	61330157050	SLIDE BEARING		1.00
10	59030023100	Dowel, 6x8x11.5		2.00
11	0025060456	HH COLLAR SCREW M6X45 TX30		4.00
12	0025060256	HH collar screw M6x25 TX30		1.00
13	0603061001	CU-SEAL RING DIN7603-6X10X1		1.00
14	0025060506	HH collar screw M6x50 TX30		1.00