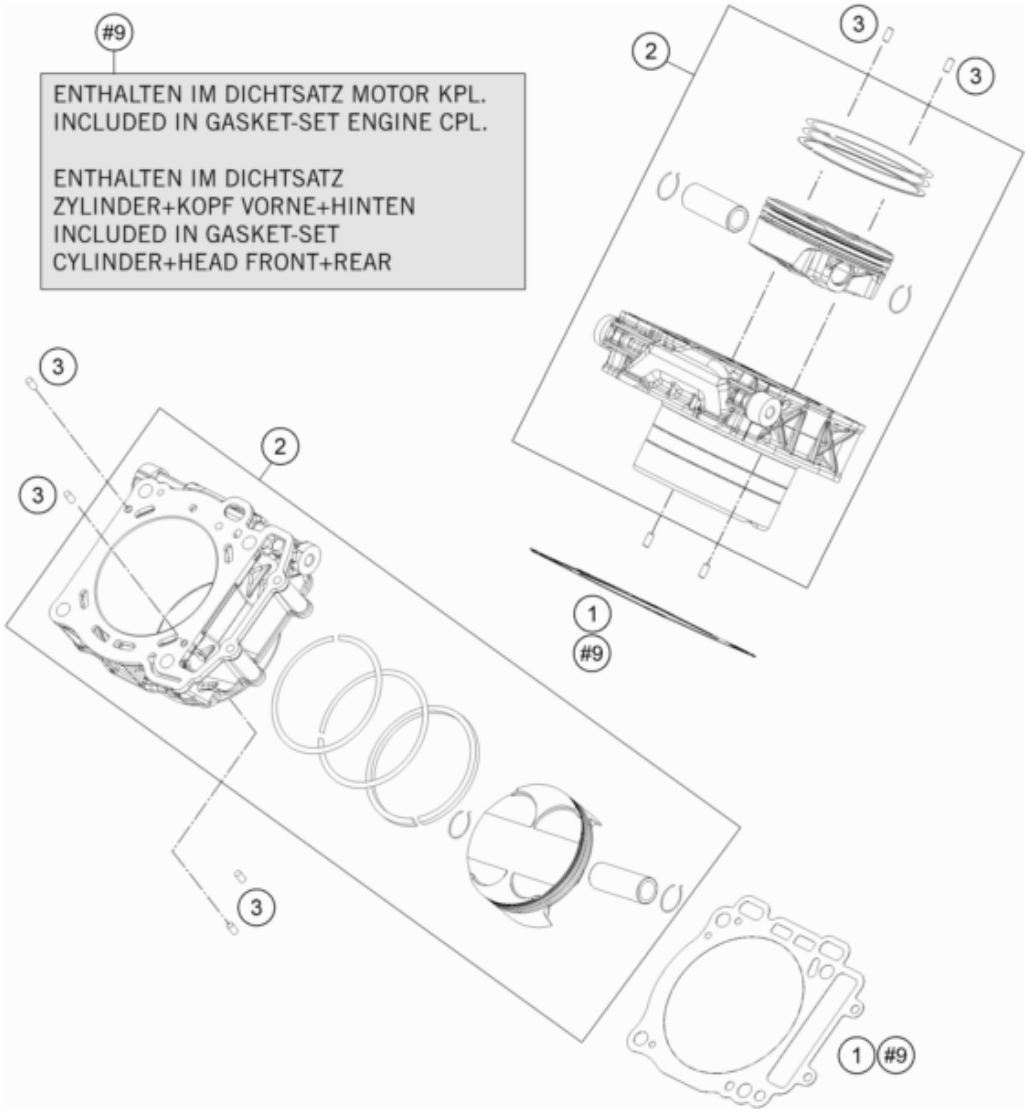

Pos	Part Number	Description	Additional Text	Quantity
1	61230035000	CYLINDER BASE GASKET 08		2.00
2	6173003800024	Piston and cylinder cmpl. d108		2.00
3	0474050100	GROOVED PIN DIN1474 5X10		8.00