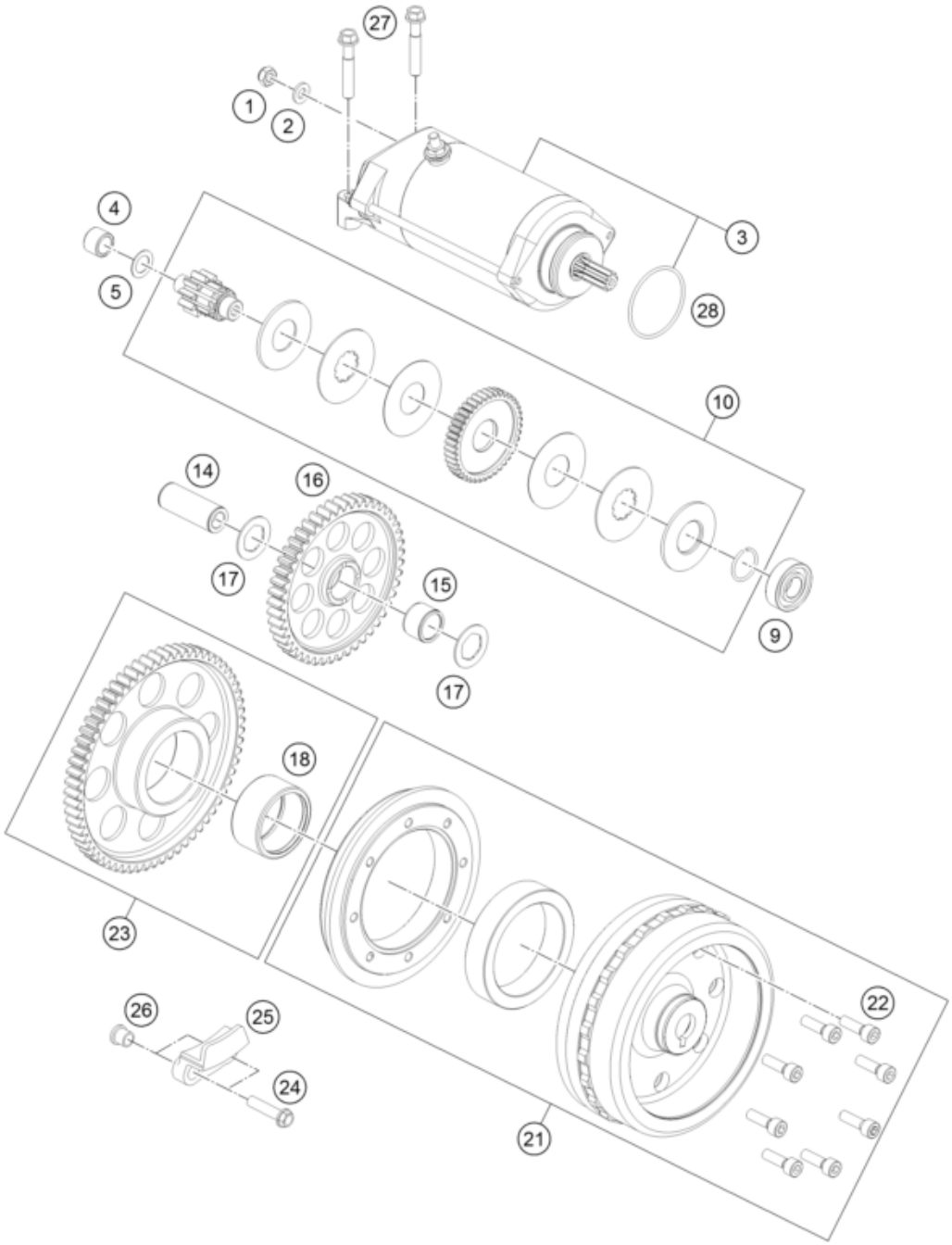

Pos	Part Number	Description	Additional Text	Quantity
1	0985060003	Self lock. nut DIN985-M6-A2		1.00
2	0125060003	WASHER DIN0125-A 6,4		1.00
3	60440001000	STARTER MOTOR		1.00
4	0618101410	needle sleeve HK 1010 10x14x10		1.00
5	60038007010	washer 10x16x0.5		1.00
9	0625060016	deep groove ball bearing 6001.		1.00
10	60340117200	Torque limiter 10/55 cmpl.		1.00
14	61230058050	BEARING BOLT 15X39 08		1.00
15	0405151913	needle roller and cage assy. K		1.00
16	60340122000	IDLER SHAFT 43T		1.00
17	61230057060	STOP DISK 15,2X25X1		2.00
18	0618354220	NEEDLE BUSH HK3520 35/42/20		1.00
21	61539005000	Rotor complete		1.00

22	0912060206	AH SCREW DIN 912 M6X20		8.00
23	60340020100	free wheel gear cpl. 66th		1.00
24	0025060256S	SK-BUNDSCHRAUBE M6X25 ISA30		2.00
25	60040027000	FREEWHEEL HOLDER 03		1.00
26	60040027050	SUPPORTING SLEEVE 03		2.00
27	0025060300	HH COLLAR SCREW M6X30 INOX		2.00
28	0770033020	O-RING 33,75X2,00		1.00