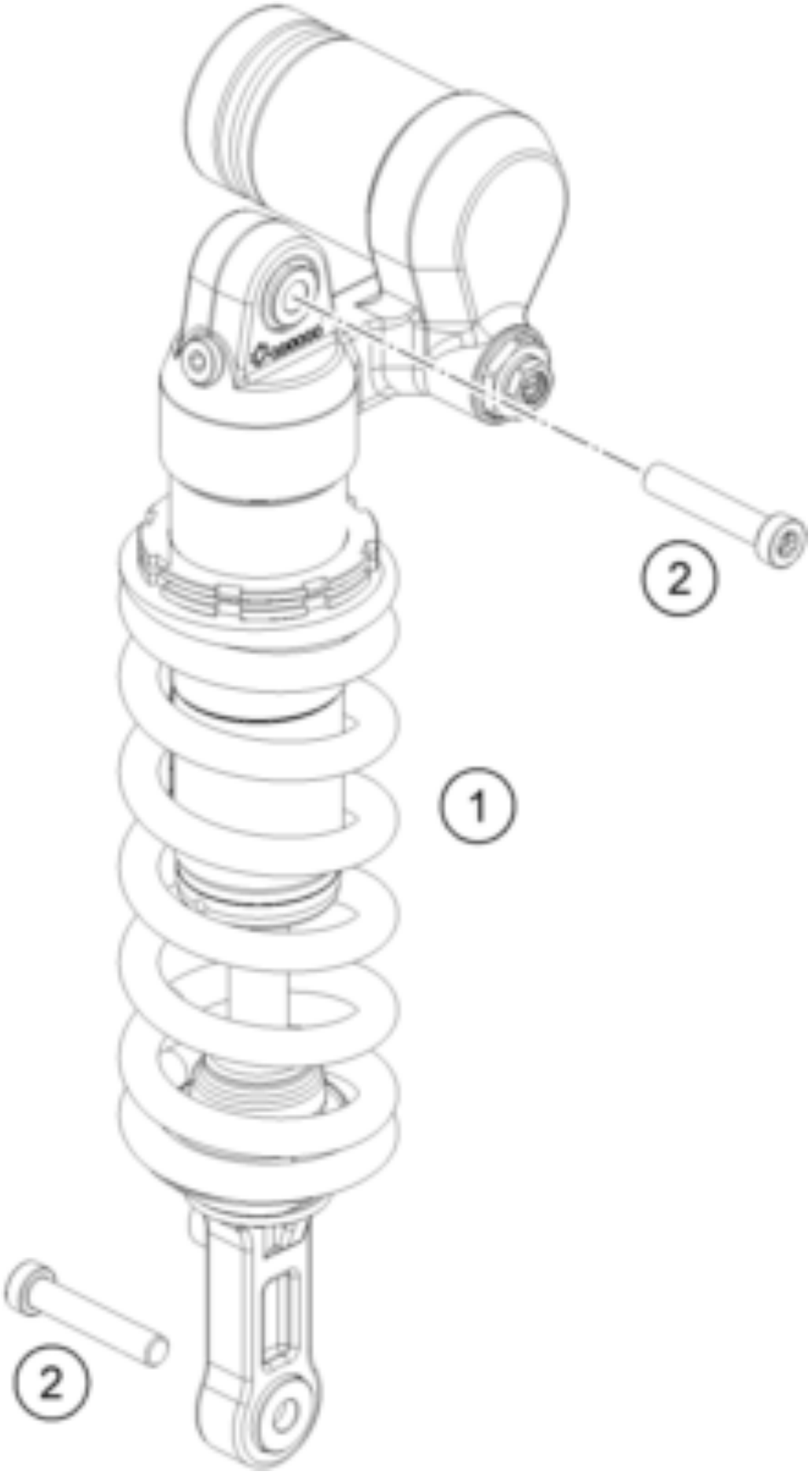

Pos	Part Number	Description	Additional Text	Quantity
1	15187S1001	Monoshock KTM 690 Enduro R 19		1.00

2	76504016000	CYL. SCREW M10X1,25 L=53		2.00