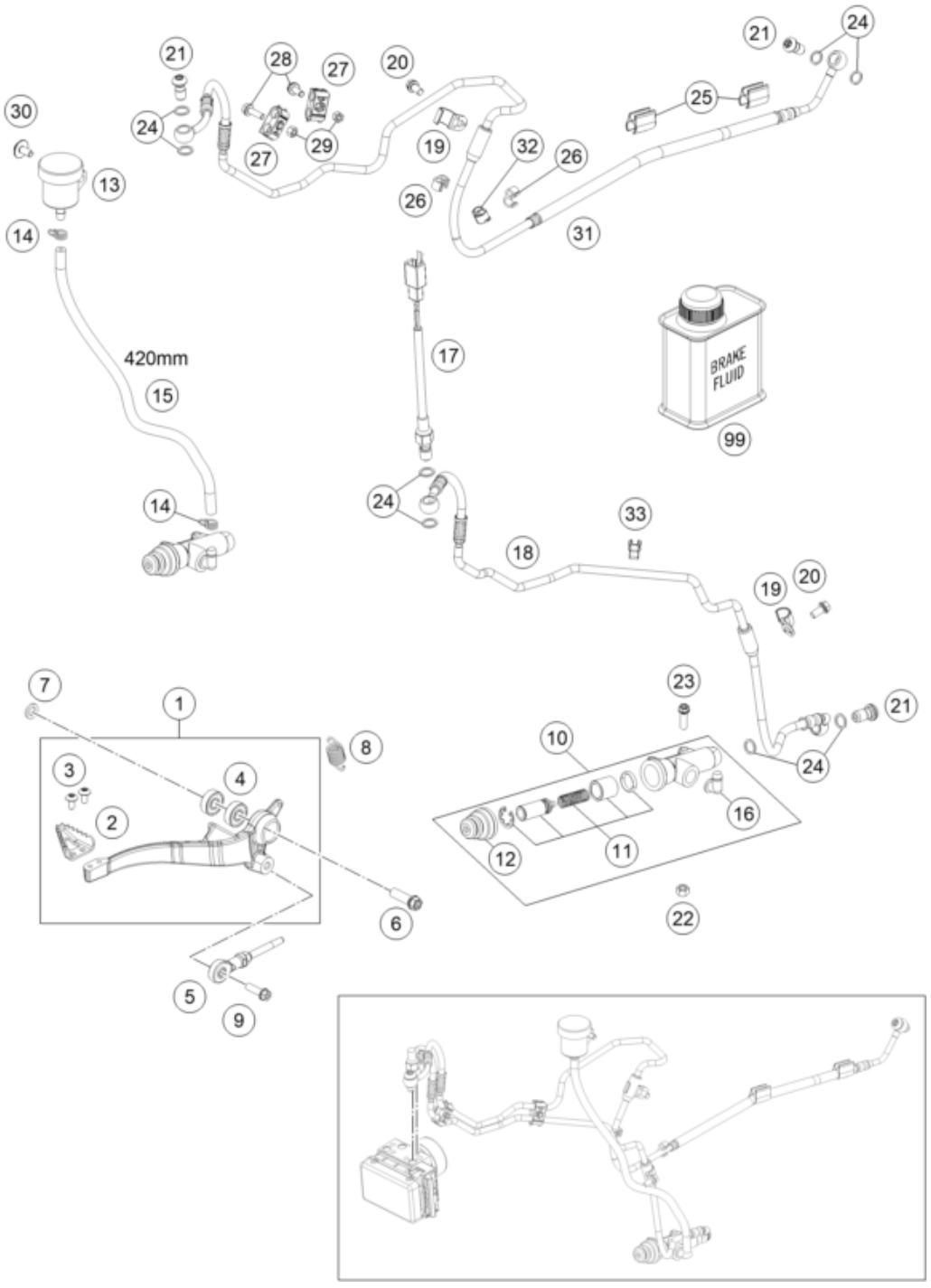

Pos	Part Number	Description	Additional Text	Quantity
1	76913050144	Footbrake lever preassembled		1.00
2	60013051000	STEP PLATE FOOT BRAKE LEVER 03		1.00
3	58605083010	SCREW TORX M5X10 05		2.00
4	0625006087	Grooved ball bearing 608 2RS C		2.00
5	76513056144	PUSH ROD CPL.		1.00
6	0025080306S	HH COLLAR SCREW M8X30 TX40		1.00
7	0125080003	washer DIN 125 A -8.4		1.00
8	54603062200	Return spring for brake lever		1.00
9	0025060206S	HH collar screw M6x20 TX30		1.00
10	54513101044	MAIN BRAKE CYLINDER '89		1.00
11	76513061000	REPAIR KIT PISTON 13MM		1.00

12	54513151000	RUBBER SLEEVE		1.00
13	54513030044	BRAKE FLUID RESERVOIR '89		1.00
14	58007017000	YDNAC-clamp 10101 (10.4MM)	300 TPI Erzbergrodeo	2.00
15	69013069001	HOSE FOR RESERVOIR 6X1,5	1X 60MM, 1X 195MM	1.00
16	54513155000	ANGLE PIECE		1.00
17	62111051000	BRAKE LIGHT SWITCH REAR		1.00
18	76542003000	BRAKE HOSE REAR MASTER CYL.		1.00
19	76542050000	CLAMP		2.00
20	0025060126	HH collar screw M6x12 TX30		2.00
21	62113020100	banjo bolt M10x1x19.5		3.00
22	0926060000	STOP NUT M6 DIN6926 A2-70		2.00
23	0025060256	HH collar screw M6x25 TX30		2.00
24	0603100141	sealing ring DIN 7603 10x14x1	ONLY FOR LC4 ADVENTURE	8.00
25	54813026100	CABLE SUPPORT 10/4MM 2014		2.00
26	60111094100	BAR SPACER 4/7 BLACK		2.00
27	60113146000	SUPPORT FOR BRAKE HOSE M5		2.00
28	0025050166	HH collar screw M5x16 TX30		2.00
29	0985050003	Self locking nut DIN 985 M5		2.00
30	0024060136	HH collar screw M6x13 TX30		1.00
31	76542001000	BRAKE HOSE REAR CALIPER		1.00
32	76913047010	spacer bracket D=6/8,5mm		1.00
33	76913047020	Hose bracket		1.00
99	00062030000	Brake fluid DOT5.1 0,25L		1.00