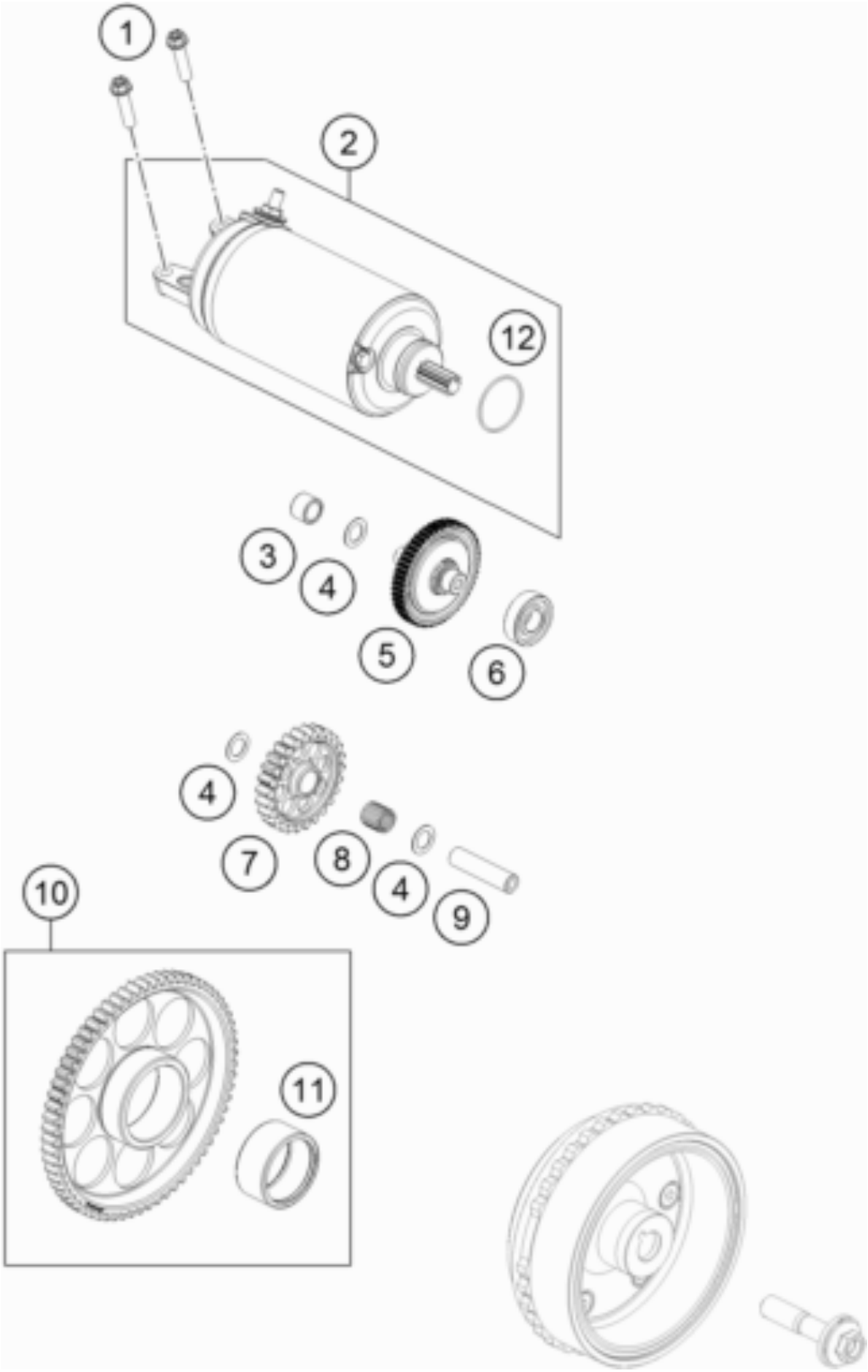


| Pos | Part Number | Description | Additional Text | Quantity |
|---|---|---|---|---|
| 1 | 0025060256 | HH collar screw M6x25 TX30 | | 2.00 |
| 2 | 63540001000 | starter | | 1.00 |
| 3 | 0618101410 | needle sleeve HK 1010 10x14x10 | | 1.00 |
| 4 | 60038007010 | washer 10x16x0.5 | | 3.00 |
| 5 | 60340117200 | Torque limiter 10/55 cmpl. | | 1.00 |
| 6 | 0625060016 | deep groove ball bearing 6001. | | 1.00 |
| 7 | 63540022000 | idler gear 26 teeth | L-PART | 1.00 |

| | | | | |
|---|---|---|---|---|
| 8 | 58440090000 | needle roller and cage K 10x13 | | 1.00 |
| 9 | 63540029000 | pivot pin | | 1.00 |
| 10 | 63540020000 | free wheel gear cpl. | L-PART | 1.00 |
| 11 | 0618354220 | NEEDLE BUSH HK3520 35/42/20 | | 1.00 |
| 12 | 0770244031 | O-Ring 24,40 x 3,10 NBR 70 | | 1.00 |