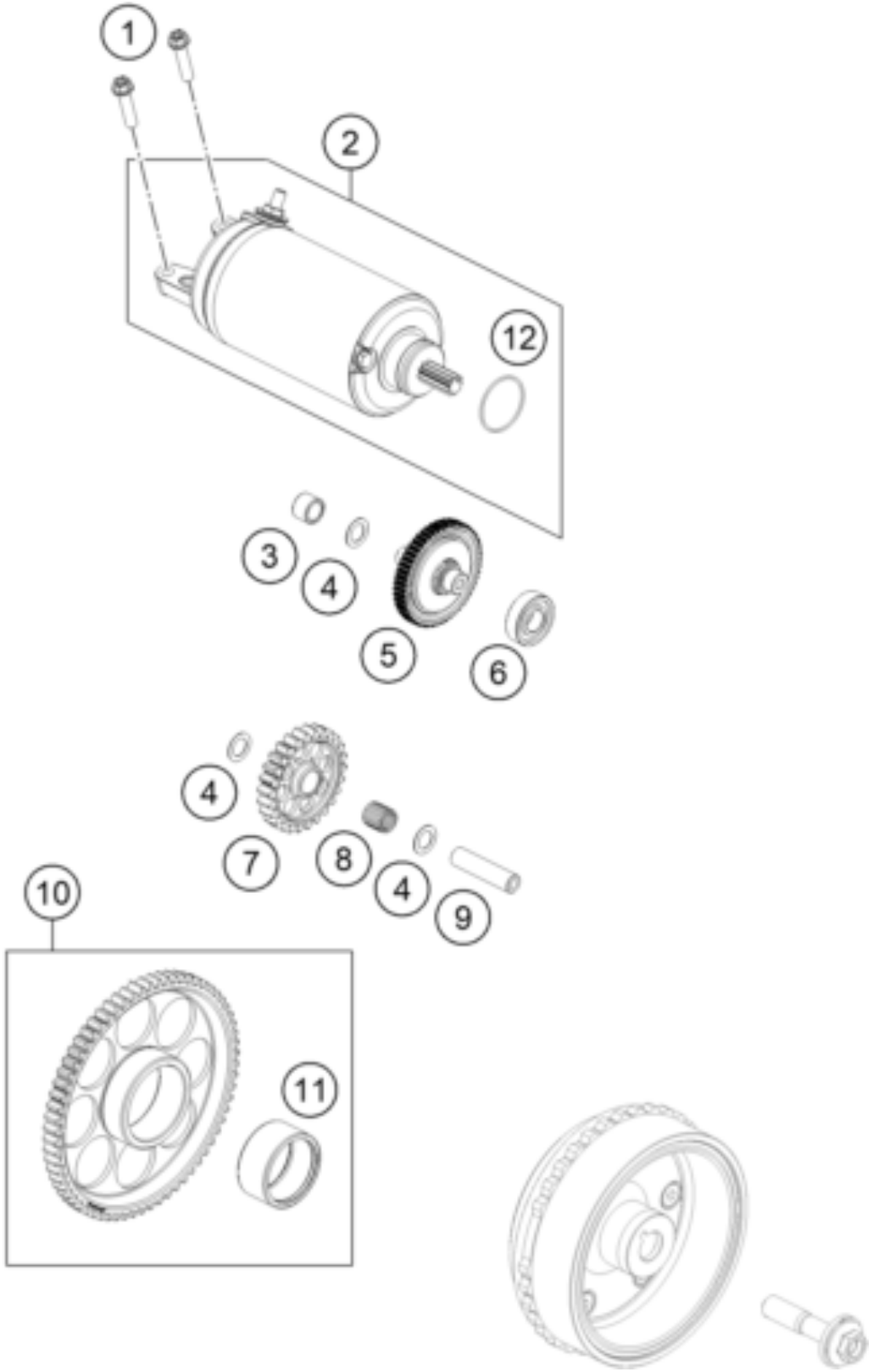

Pos	Part Number	Description	Additional Text	Quantity
1	0025060256	HH collar screw M6x25 TX30		2.00
2	63540001000	starter		1.00
3	0618101410	needle sleeve HK 1010 10x14x10		1.00
4	60038007010	washer 10x16x0.5		3.00
5	60340117200	Torque limiter 10/55 cmpl.		1.00
6	0625060016	deep groove ball bearing 6001.		1.00
7	63540022000	idler gear 26 teeth	L-PART	1.00

8	58440090000	needle roller and cage K 10x13		1.00
9	63540029000	pivot pin		1.00
10	63540020000	free wheel gear cpl.	L-PART	1.00
11	0618354220	NEEDLE BUSH HK3520 35/42/20		1.00
12	0770244031	O-Ring 24,40 x 3,10 NBR 70		1.00