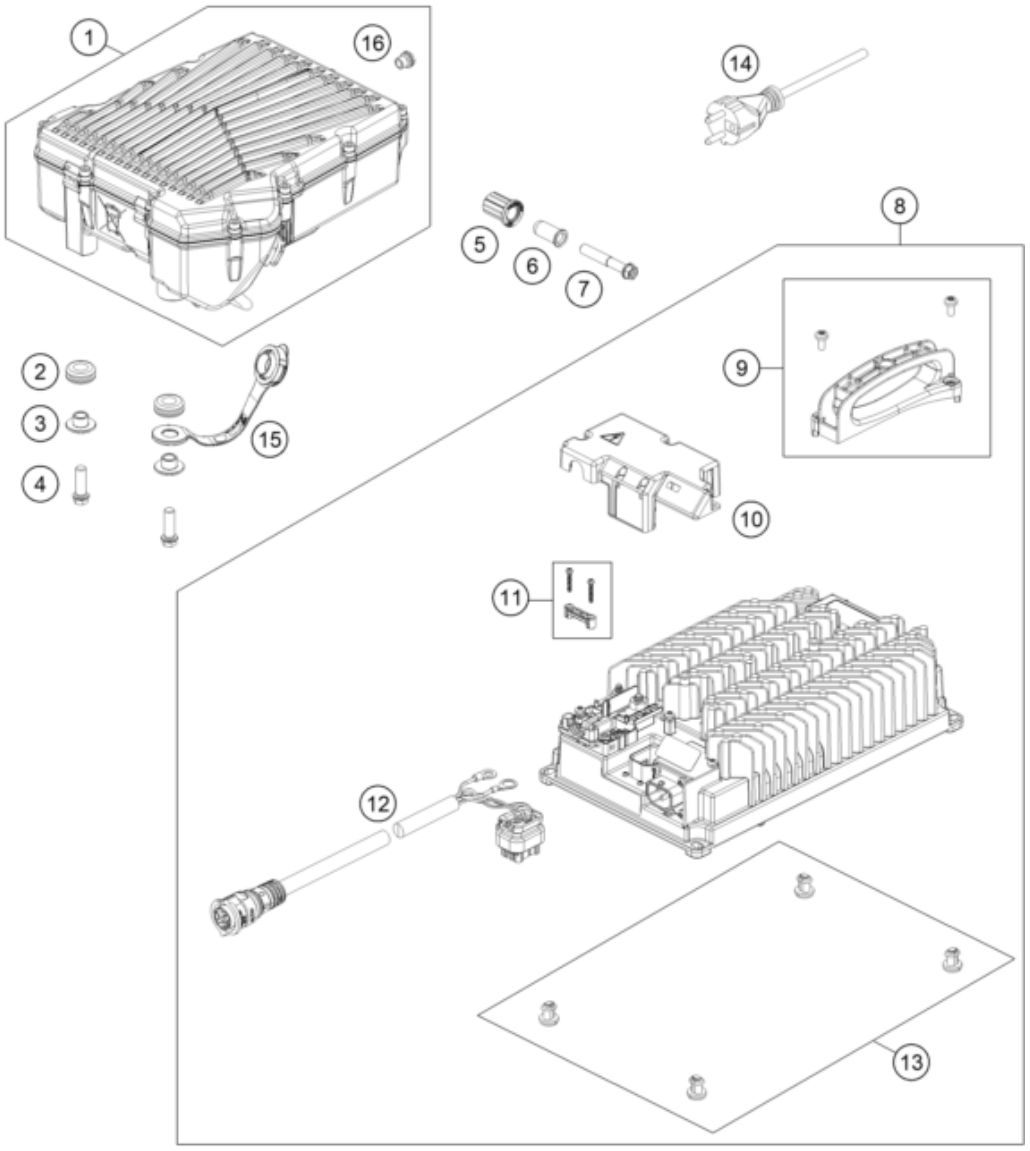

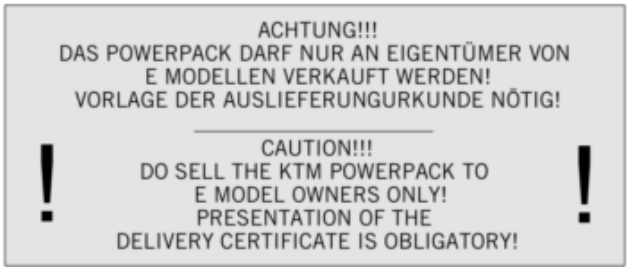

Pos	Part Number	Description	Additional Text	Quantity
1	45445053200	Power Pack Mini E		1.00
2	41001052000	RUBBER SLEEVE D=12MM		2.00
3	58405050065	collar bushing 8.5x12x23.5x10		2.00
4	0025080256	HH collar screw M8x25	A400C102Z106102	2.00
5	61005013000	RUBBER SILENCER SUPPORT 05		1.00
6	61005014000	Sleeve silencer support		1.00
7	0025080506	HH collar screw M8x50 TX40		1.00
8	45429074044	Charger cmpl.		1.00
9	45429074052	Handle kit incl. Screws kit		1.00
10	45429074053	Cover cmpl.		1.00
11	45429074085	Strain relief, charging cable		1.00

12	45429074180	Charging cable		1.00
13	45429074051	Rubber feet kit		1.00
14	45429074010	EU power cord		0.00
14	45429074020	UK power cord		0.00
14	45429074030	US power cord		0.00
14	45429074040	OZ power cord		0.00
15	45445053020	Protection cap charg. Conn.		1.00
16	70045084000	BLEEDER VALVE M12X1,5		1.00