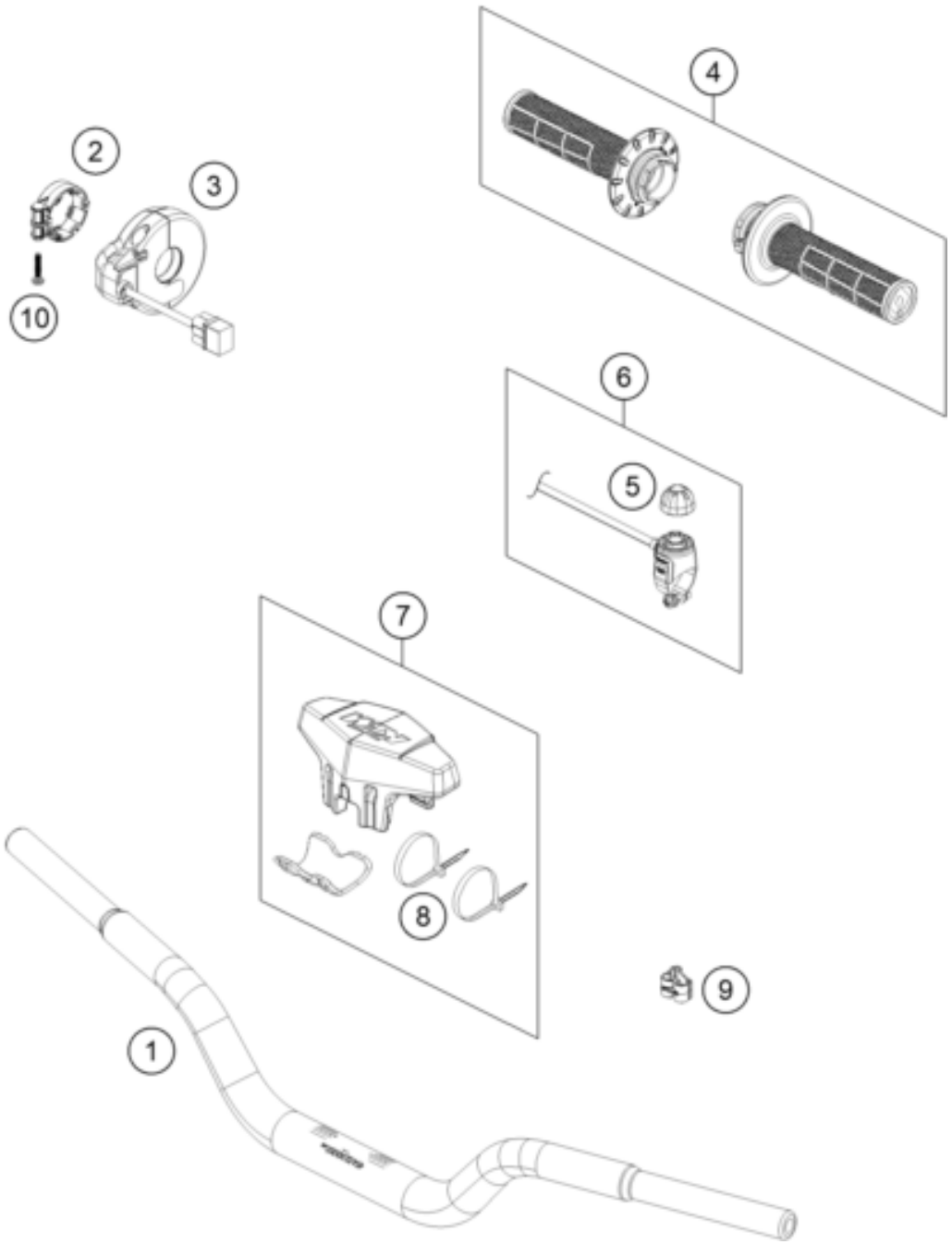

Pos	Part Number	Description	Additional Text	Quantity
1	45402001000	Handlebar mini		1.00
2	45402015000	clamping ring		1.00
3	45411012000	Ride-by-wire without throttle		1.00
4	45402021100	Grip set		1.00
5	45411089050	Plug for safety pull switch		1.00
6	45411089000	Safety pull switch		1.00
7	45402002044	Handlebar pad cmpl.		1.00
8	44011076305	CABLE TIE 300/4,8MM BLACK		0.00
9	83013026000	Line guide		1.00
10	0081035183	Ejot delta PT screw 35X18		1.00