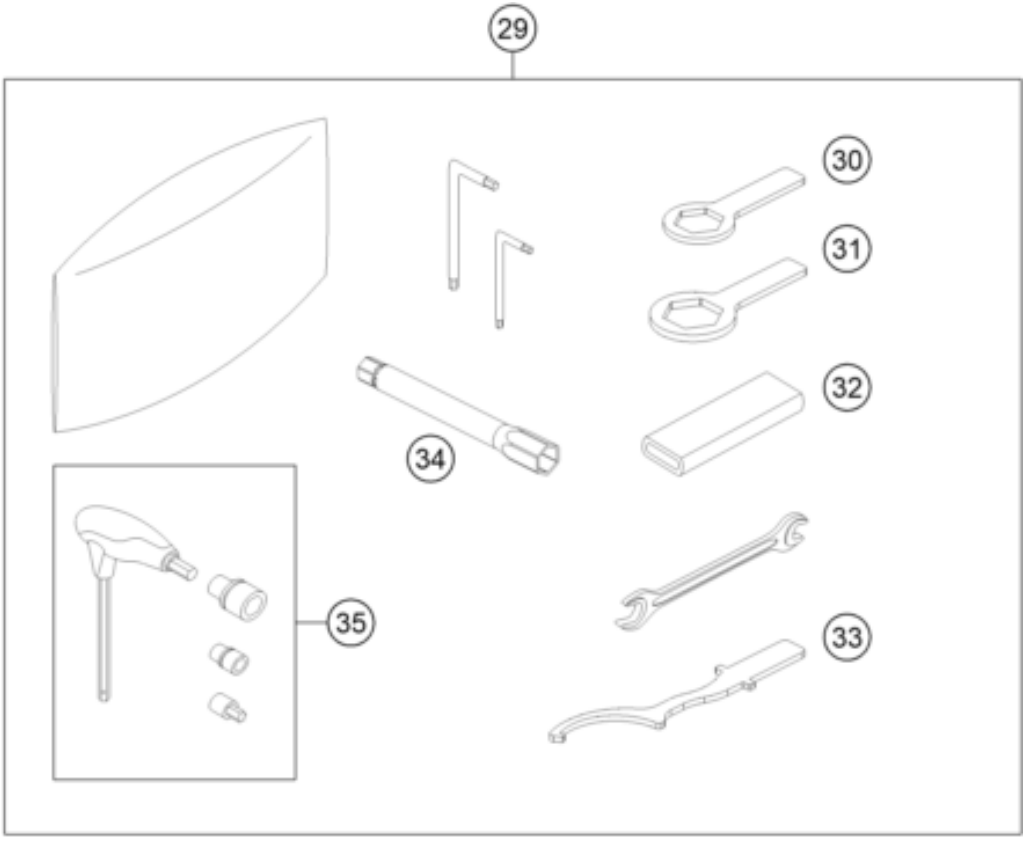

OHNE ABBILDUNG
WITHOUT ILLUSTRATION

0

TECHNISCHE DOKUMENTATION
TECHNICAL DOCUMENTATION

1

Pos	Part Number	Description	Additional Text	Quantity
0	69008021160	special screw M5x12		2.00
0	90112040000	MIRROR L/S	L-PART	1.00
0	60408061050	RUBBER 14X6.5X2.3MM		2.00
0	90112041000	MIRROR R/S	L-PART	1.00
0	64112008100	Pillion Handle Bar		1.00
0	0035080506S	AH collar screw M8x50 ISA45		4.00
0	58412080400	Rear reflector red		1.00
0	64112181000	Bracket for reflector		1.00
0	64108023010	Splash protection		1.00
0	54603048600	RANGE CHANGE METAL NUT M5 INOX		2.00
0	0081250181	SCREW FOR PLASTIC 50X18 T20		2.00
0	00063004202	PRINT LABEL 60X51 MM		1.00
0	3210917	NOTEPAD		1.00
0	20180189INT	Sticker accessory kit		1.00
0	00063004012	HEADLIGHT MASK BOX		1.00
0	312305	DOCUMENTS BAG 2006		1.00
0	312313	KTM BALLPOINT PEN ORANGE		1.00
0	20180195INT	KTM Bypack Folder Street		1.00
0	00029094032	OBD Cable		1.00

0	00063004108	Bubble wrap blanks 80MY		2.00
0	00063004106	SPIRALHÜLSEN LC4 + LC8		2.00
0	00063099114	Pocket for operating manual 29		1.00
0	50203098003	Sticker "WARNING LABEL 3"		1.00
1	3213925EN	Own. Man. 790 Duke EU 2019		1.00
29	64129099000	Tool set		1.00
30	76029063000	RING WRENCH SW27		1.00
31	60012060032	RING WRENCH 32MM		1.00
32	60012060000	GRIP FOR RING WRENCH		1.00
33	76029062000	HOOK WRENCH F. SHOCK ABSORBER		1.00
34	75029072000	SPARK PLUG WRENCH		1.00
35	60029070100	T-WRENCH WS=6/8/10/17		1.00