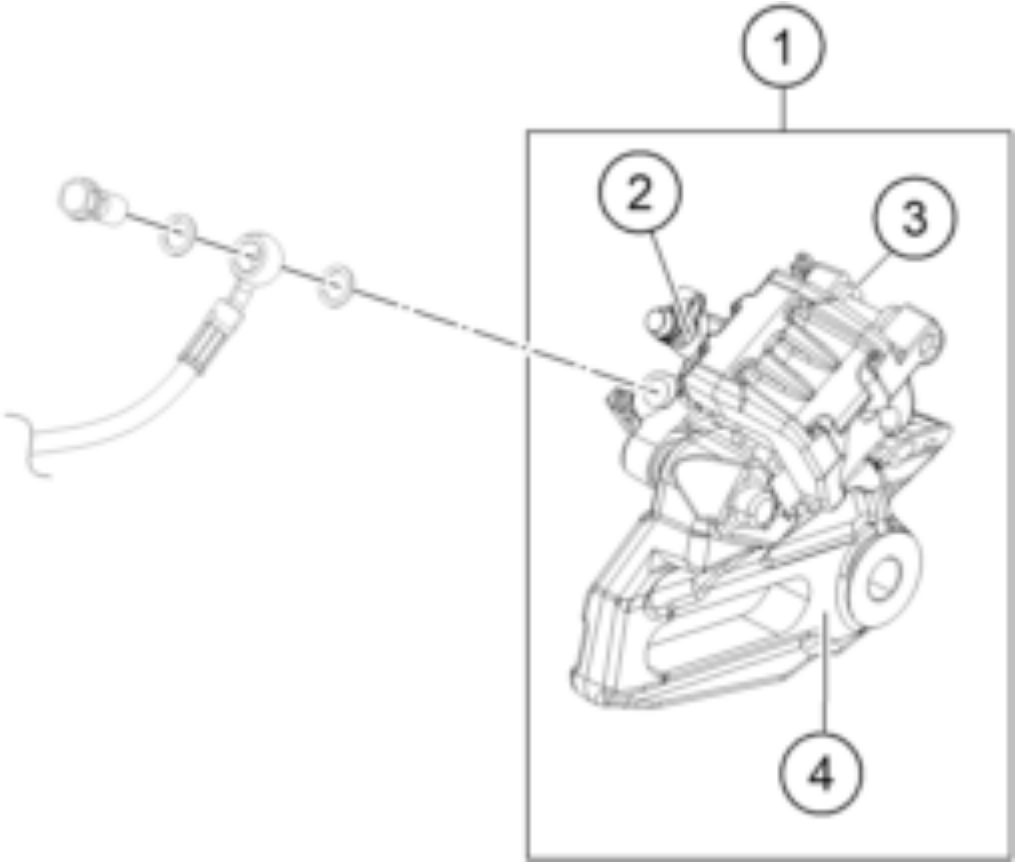

Pos	Part Number	Description	Additional Text	Quantity
1	90113080000	brake caliper, rear cpl.		1.00
2	90113121000	BLEEDER SCREW		1.00
3	90113090000	REAR BRAKE PADS - SET		1.00
4	90113075000	BRAKE CALIPER SUPPORT REAR		1.00