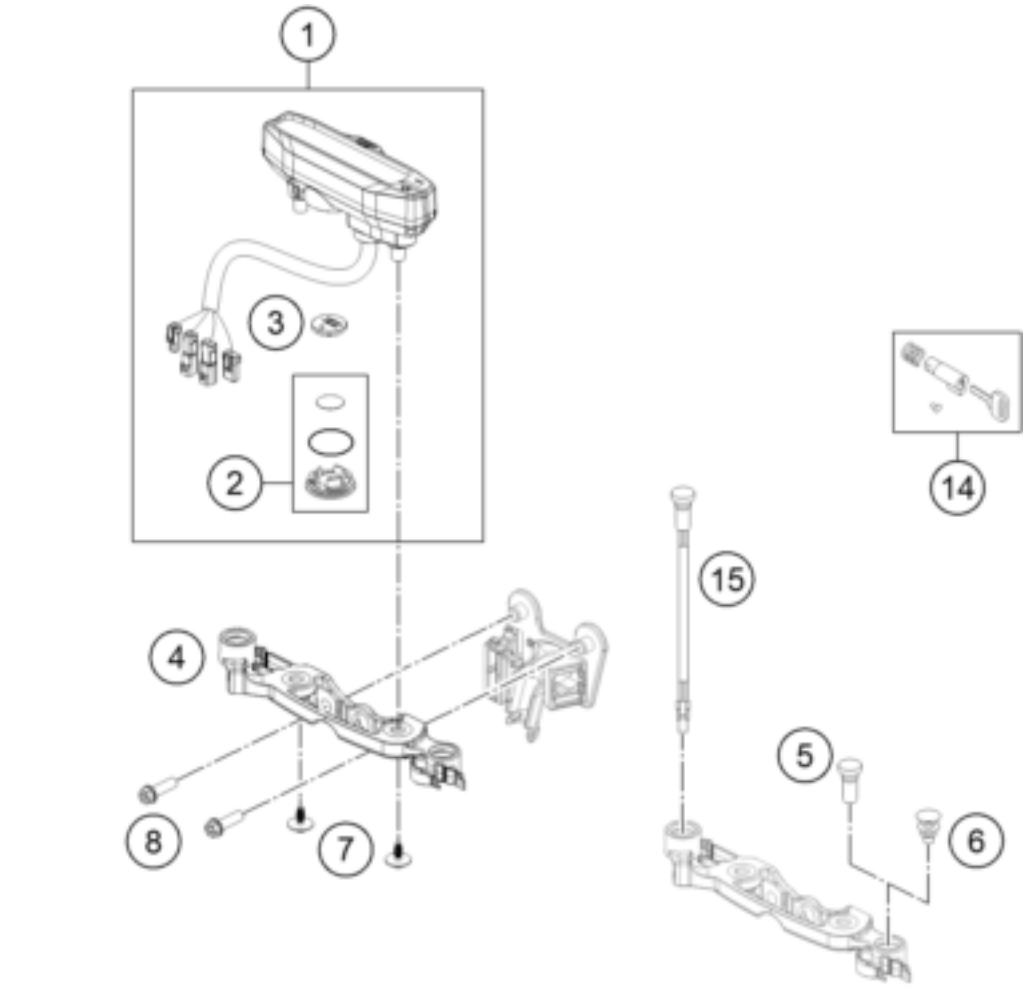

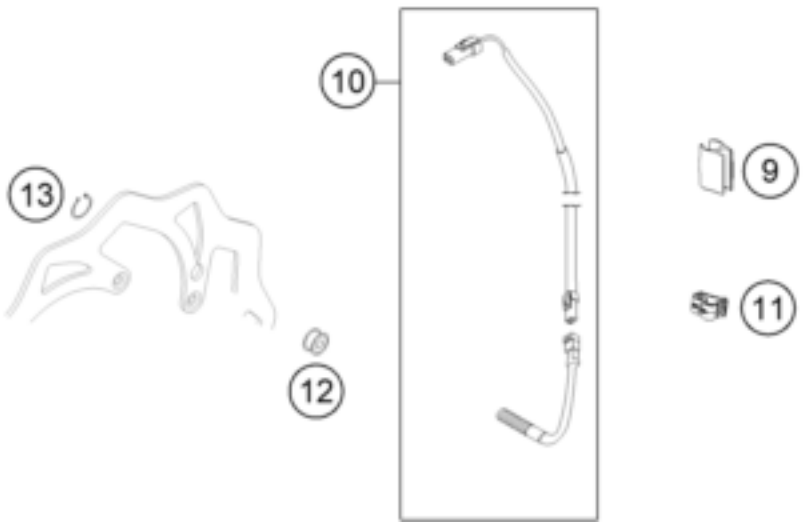

Pos	Part Number	Description	Additional Text	Quantity
1	77714069600	Speedometer digital km/h f. 21	REPROGRAMMABLE: KM/H - MPH	1.00
2	77714069010	BATTERY COVER F. SPEEDOMETER		1.00
3	58314068000	BATTERY F. SPEEDOM. M.A.E. 02	TYPE CR 2430	1.00

4	55614060000	Speed indicator mount		1.00
5	58011024300	FLASHER INDICAT.LIGHT GREEN'98	EXC EU+AUS	1.00
6	50210086000	Plug SFL16		1.00
7	0081645121	EJOT DELTA PT SCREW 45X12-Z		2.00
8	0024060206	HH collar screw M6x20 TX30		2.00
9	54813026000	CABLE SUPPORT 10/6MM 06		2.00
10	54814068100	CABLE FOR DIGITAL SPEEDOM. 06		1.00
11	83013026000	Line guide		2.00
12	54814069050	MAGNET FOR DIGITAL SPEEDOM. 03		1.00
13	0471009104	CIRCLIP DIN0471- 9X1 INOX	625 SC	1.00
14	78003035100	Steering lock		1.00
15	55638063000	Oil Indicator		1.00