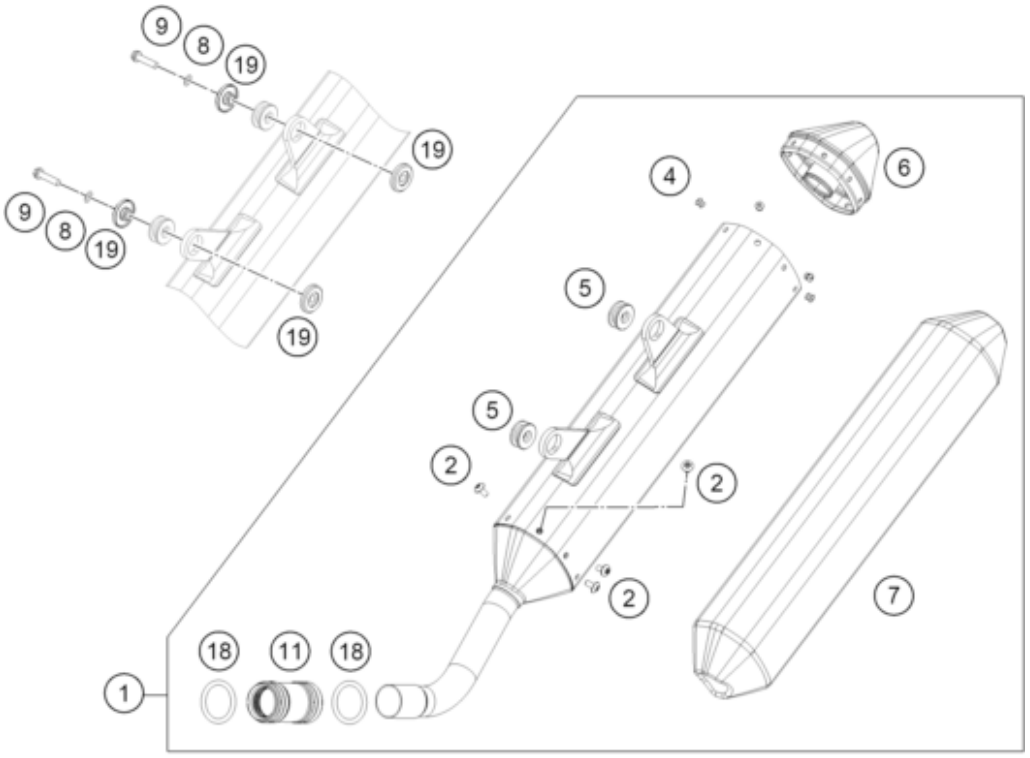

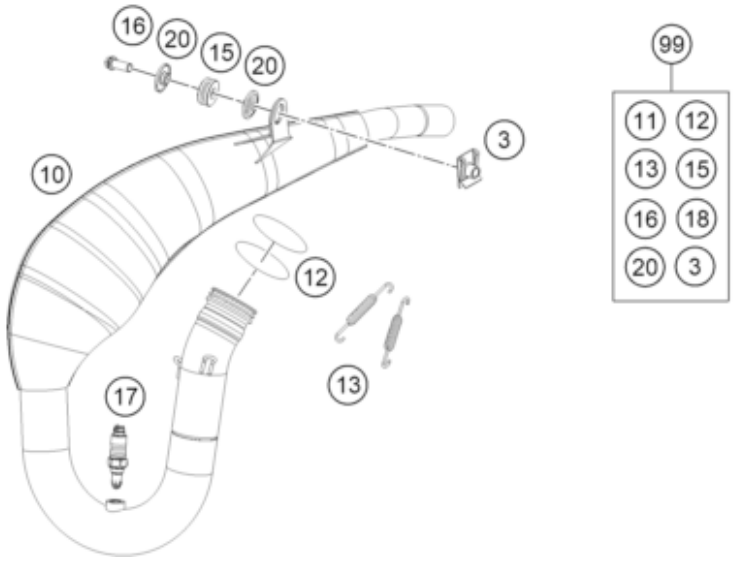

Pos	Part Number	Description	Additional Text	Quantity
1	55505083000	Main silencer EXC		1.00
2	78105081010	SCREW TORX M5X10		7.00
3	54603048000	RANGE CHANGE METAL NUT M8		1.00
4	0011480800	DUMMY RIVET 4,8X 8 NIRO		7.00
5	77205068000	DAMP. COMPON. BLACK		2.00
6	55505083060	end cap cpl.		1.00
7	55505083085	stuffingyarn package		1.00
8	50233041000	Pair of washers M6 NORDLOCK		2.00
9	0025060306	HH collar screw M6x30 TX30		2.00
10	55705009000	Header with catalytic converte		1.00
11	55405057000	exhaust rubber		1.00

12	0770440030	O-RING 44,00X3,00 VITON	ONLY FOR 250	2.00
13	50305016000	TEN.SPRING L=62MM EY.MOVEABLE		2.00
15	79105068000	Damper gray	2 Piece without CAT	1.00
16	0025080306	HH collar screw M8x30		1.00
17	75041090200	LAMBDA SENSOR		1.00
18	55405058000	hose spring		2.00
19	77205169000	BUSHING 7.5x12x28x8.3 11		4.00
20	77805069000	BUSHING 8.5x12x28x8.3	4 Piece without CAT	2.00
99	55705007010	Exhaust Kit 250/300ccm		1.00