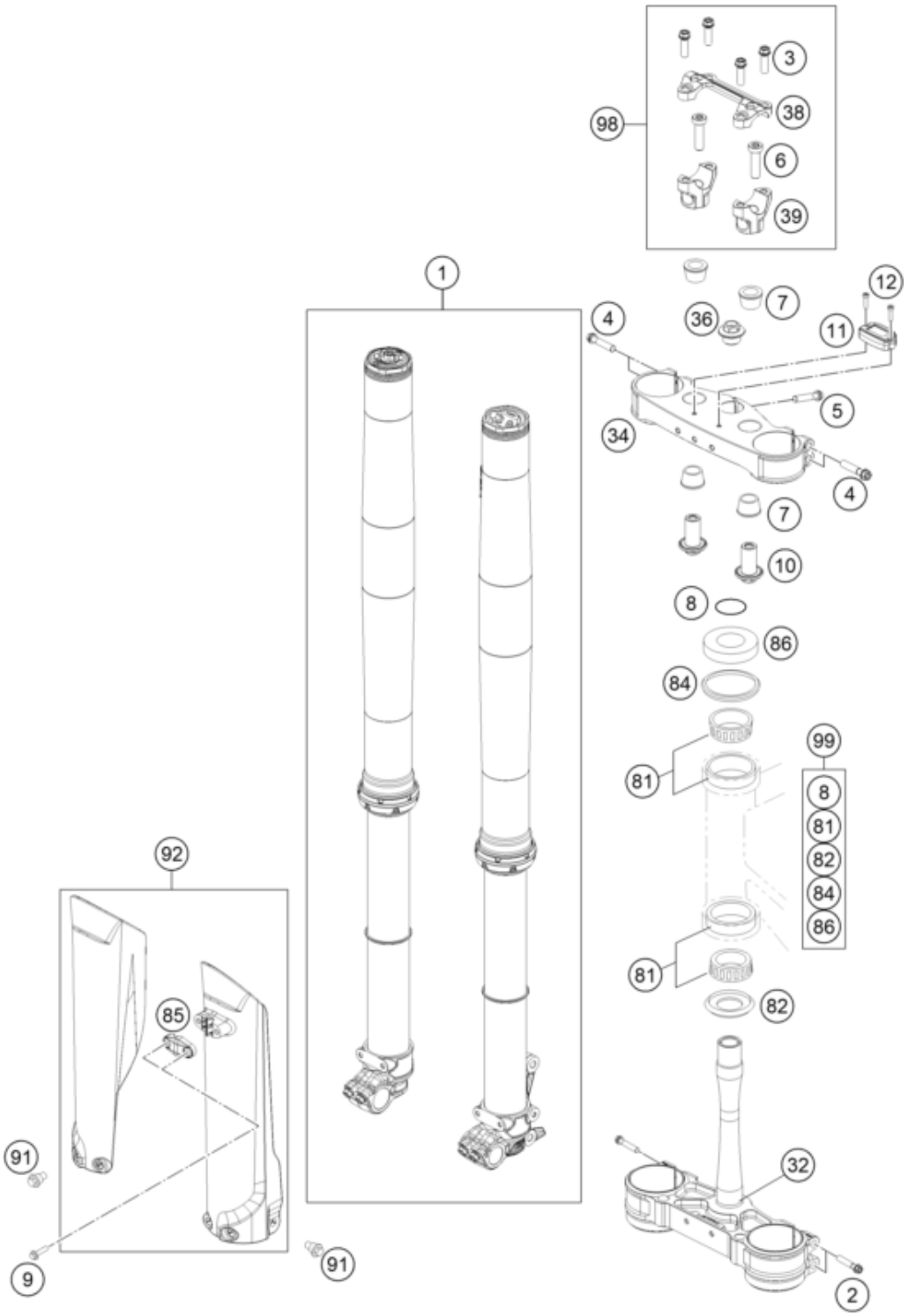

Pos	Part Number	Description	Additional Text	Quantity
1	34188T5701	Fork 350 SX-F 2020 US		1.00
2	0025080506	HH collar screw M8x50 TX40		4.00
3	0025080256	HH collar screw M8x25	A400C102Z106102	4.00
4	0025080406	HH COLLAR SCREW M8X40 TX40		4.00
5	0015080256S	HH COLLAR SCREW M8X25 WS=10		1.00
6	0032100356S	AH-COLLAR SCREW M10X35 ISA45		2.00
7	83001040000	RUBBER BUSH		4.00
8	0770025035	O-RING 25X3,55 NBR70 05		1.00
9	0017060206	SCREW F. PLASTIC K60X20AL SW6		2.00
10	79001037034	HANDLEBAR SUPPORT LOWER PART		2.00

11	78112020050	HOUR METER		1.00
12	0912040163	AH SCREW DIN0912-M 4X16		2.00
32	7900103202230	LOWER TRIPLE CLAMP CPL. 16		1.00
34	7910103402230	Top triple clamp X=22 mm 2019		1.00
36	70009082000	AXLESCREW M20X1.5 SW17		1.00
38	79001038000	HANDLEBAR CLAMP 28MM		1.00
39	79001039036	HANDLEBAR SUPPORT D28MM-H36MM		2.00
81	54201081100	TAPERED ROLLER BEARING CPL. 06		2.00
82	77701084000	O-RING SUPPORT W. SEALING LIP		1.00
84	54601184000	STEARING HEAD GASKET TOP		1.00
85	77701085100AB	Clamp for brake hose		1.00
86	78101086000	STEERING HEAD COVER		1.00
91	59001092050	SPECIAL SCREW M6X12,5 WS=8		6.00
92	77701094100ABA	Fork Protector kit SX/XC 2020	With Decal	1.00
98	00050000929	HANDLEBAR SUPPORT KIT D28/H36		0.00
99	00050000930	STEARING HEAD REP. KIT 06-15		0.00