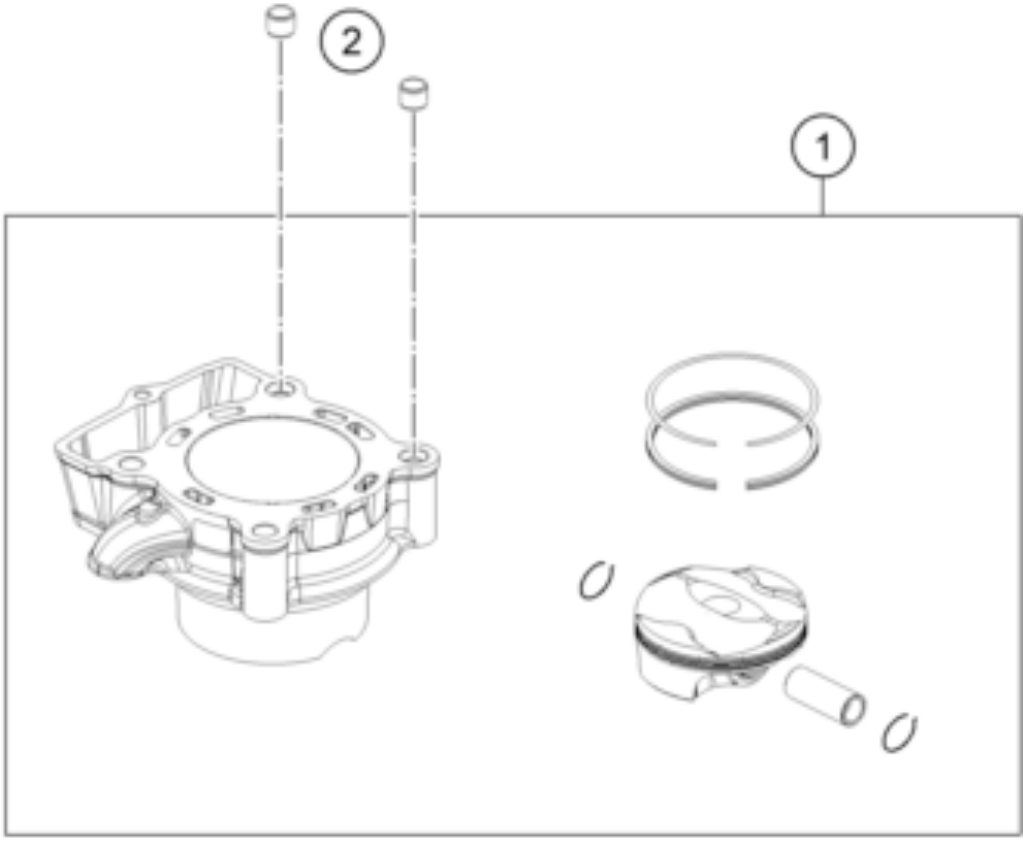

Pos	Part Number	Description	Additional Text	Quantity
1	79330038000	Cylinder + Piston		1.00
2	58530014100	dowl sleeve 10.2x12.5x10		2.00
3	79230035000	CYLINDER BASE GASKET		1.00