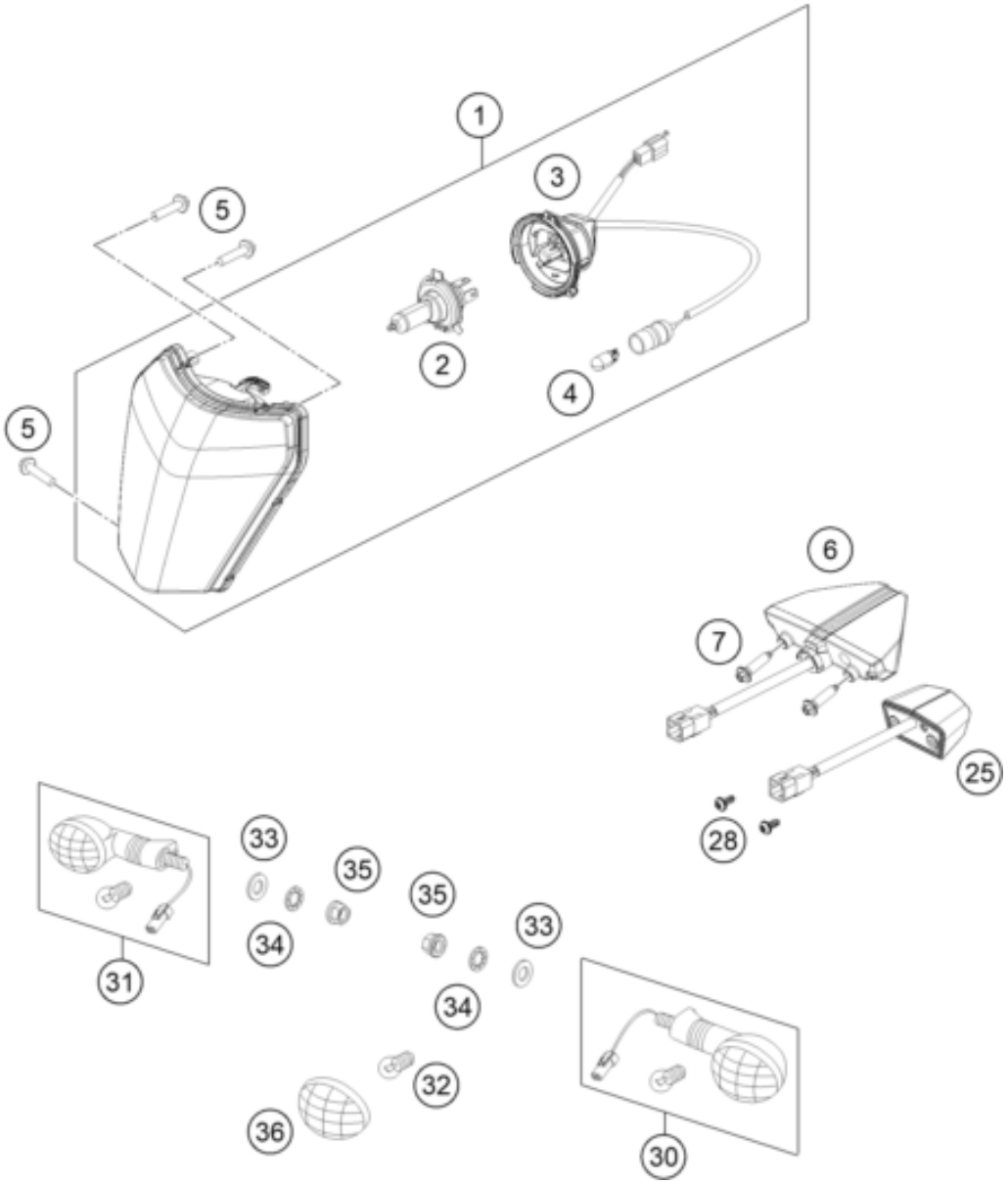

Pos	Part Number	Description	Additional Text	Quantity
1	78114001000	HEAD LIGHT CPL. 2013		1.00
2	54611038012	BULB HS1 12V 35/35W WHITE	SOCKET PX43T	1.00
3	78114001050	LAMP BRACKET CPL. 2014		1.00
4	49011435100	BULB 12V 5W (W2,1X9,5D) PHIL.		1.00
5	0081050181	SCREW FOR PLASTIC K50X18 T20	300 TPI Erzbergrodeo	3.00
6	79714040000	Tail light		1.00
7	0017060255	EJOT PT SCREW K60X25-Z SW6		2.00
25	60314047000	license plate lighting		1.00
28	0081050121	EJOT PT screw K50x12	only for US and SixDays	2.00
30	54814025200	FLASHER CPL. FR.L/S RE.R/S 09		2.00
31	54814026200	FLASHER CPL. FR.R/S RE.L/S 09		2.00
32	44111015100	BULB 12V 10W (BA15S)		4.00
33	0125100003	washer DIN 125 A 10.5	ONLY FOR 640 DUKE	4.00
34	0797100003	LOCK WASHER DIN6797-J10,5 ZI		4.00
35	58414030000	HH COLLAR NUT M10X1,25 WS=13	MINI ADV.	4.00
36	54814028000	FLASHER LENS L/S R/S 05		4.00