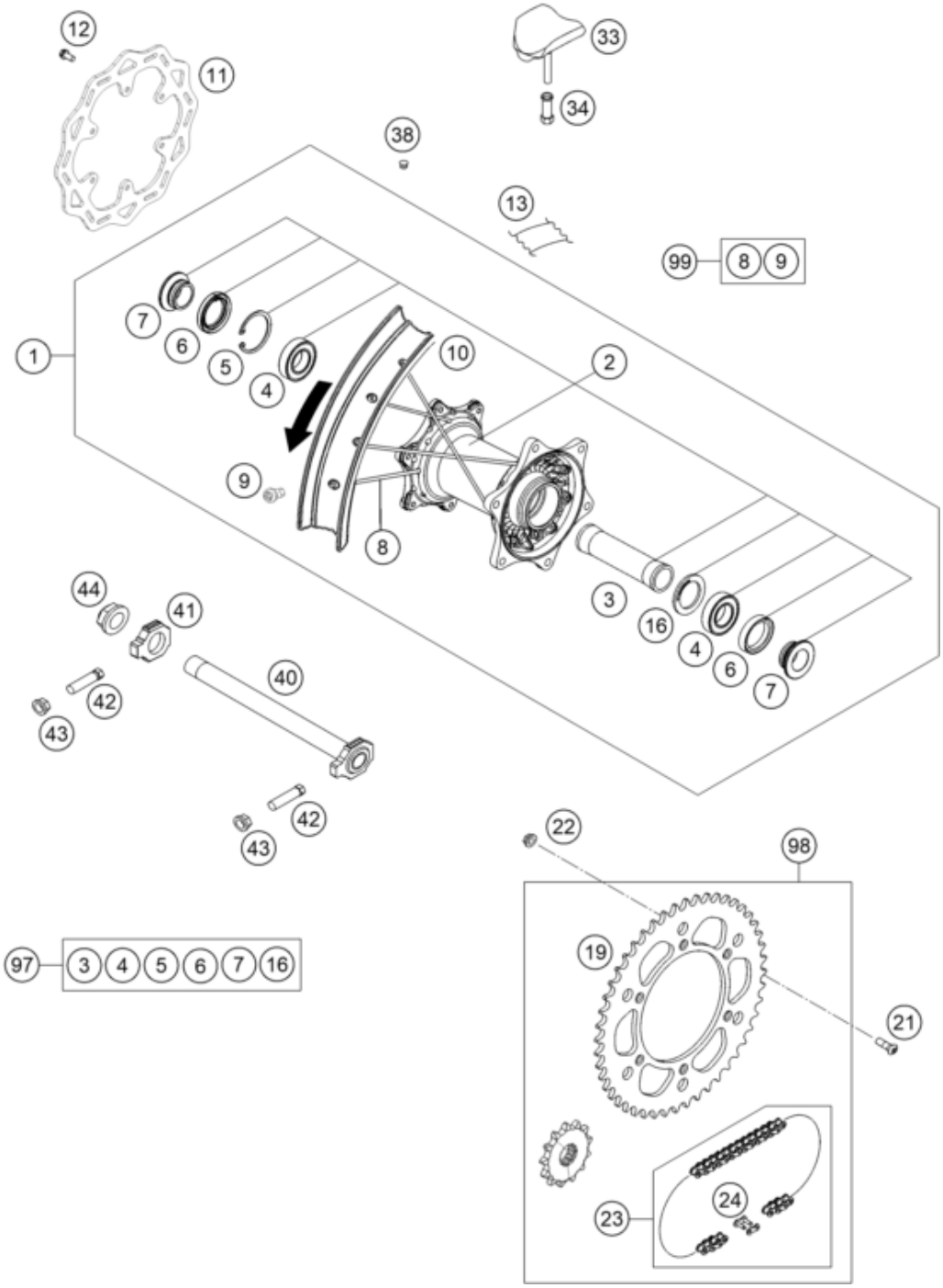

Pos	Part Number	Description	Additional Text	Quantity
1	7901000134430	REAR WHEEL CMPL. 2.15X19"EXCE		1.00
2	78010010244	REAR WHEEL HUB CPL. 2013		1.00
3	77710011000	BEARING DISTANCE TUBE 121,5MM		1.00
4	0625060058	Grooved ball bear.6005 DDU2CG2		2.00
5	0472047175	CIRCLIP DIN0472-47X1,75		1.00
6	0760324771	Radial shaft seal 32X47X7 BSL		2.00
7	77710016000	DISTANCE BUSHING REAR WHEEL		2.00
8	7901007120530	SPOKE M4,5X205-19" BLACK 1		36.00
9	79109072000	Spoke nipple M4.5		36.00
10	7911007000030	Rear rim 19x2.15		1.00
11	79010060000	BRAKE DISC REAR 220MM 16		1.00
12	59009062013	SPECIAL SCREW M6X13 WS=8 10.9		6.00

13	50310073200	Tube protector 18" and 19"		1.00
16	77710015000	DISTANCE RING		1.00
19	7771015104801	REAR SPROCKET 48-T		0.00
19	7771015105001	REAR SPROCKET 50-T		0.00
19	7771015105201	REAR SPROCKET 52-T		0.00
19	7771015105101	SPROCKET 51-Z NATURE		1.00
21	0019080266S	COUNTER-SUNK SCREW ISA45 M8X26	ONLY FOR 78003023081	6.00
22	06923080003	Hex. nut DIN EN 1661 M8 WS13		6.00
23	50310165118	CHAIN 5/8X1/4" MX	118 ROLLS REGINA	1.00
24	50310166000	Connecting link for 5031016511	REGINA	1.00
33	78110090200	Tyre locker 2,15"		1.00
34	77110090050	NUT FOR WHEEL HOLDER		1.00
38	55003135000	PLUG FOR RIM		0.00
40	77710085044	WHEEL SPINDLE CPL. '13		1.00
41	77710084000	CHAIN TENSIONER R/S		1.00
42	50304040100	screw M10x1.25x50 WS10		2.00
43	58414030000	HH COLLAR NUT M10X1,25 WS=13	MINI ADV.	2.00
44	61010086000	Collar nut M25X1.5 WS=32 05		1.00
97	77710015010	REAR WHEEL REP. KIT		0.00
98	00050002101	Drive set SX/XC 13Z/51Z		0.00
99	00050000975	SPOKE KIT REAR '19' BLACK		0.00