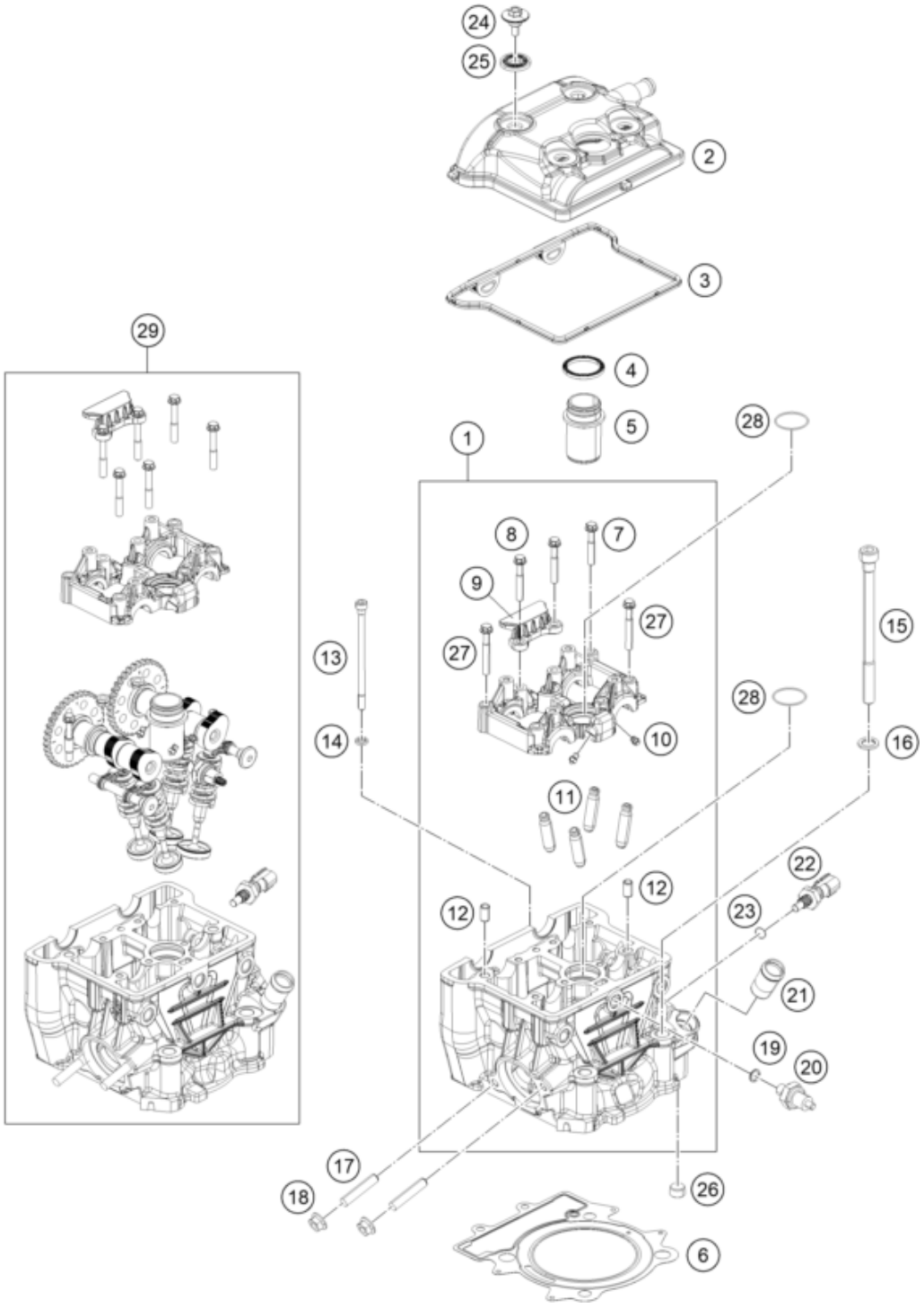

Pos	Part Number	Description	Additional Text	Quantity
1	93736020033	HEAD CYLINDER-HOLDER CAMSHAFT		1.00
2	93336052100	Valve mechanism cover cmpl.		1.00
3	93836053000	Gasket rubber		1.00
4	90236054000	GASKET SPARK PLUG SHAFT		1.00
5	90236074000	SPARK PLUG SHAFT		1.00
6	93730036000	Cylinder head gasket		1.00
7	J025060359	Hexagon screw M6X35		4.00
8	J025060453	HH COLLAR SCREW M6X45		2.00
9	90236018000	CHAIN GUIDE TOP		1.00
10	90130064000	OIL JET		4.00
11	90236025000	VALVE GUIDE		4.00

12	90130024000	PIN DOWEL 8X6,4X14MM	14mm length	2.00
13	J912061023	SOCKET HEAD SCREW M6X102		2.00
14	J125070003	WASHER 7X11X2		2.00
15	J912101449	SOCKET HEAD SCREW M10X144		4.00
16	J125110003	WASHER 11,2X18X2		4.00
17	90136020001	STUD M8		2.00
18	90136038000	FLANGED NUT M8 H7,5 WS12		2.00
19	90138091001	O-RING		1.00
20	90138091000	OIL PRESSURE SENSOR		1.00
21	90235019000	PIPE COOLANT		1.00
22	90135047000	TEMPERATURE SENSOR		1.00
23	J770000817800	O-ring 7.65x1.78		1.00
24	90136052020	VALVE COVER SCREW		4.00
25	90136052010	DECOUPLING ELEMENT		4.00
26	90236024000	PLUG		1.00
27	J025060401	HH COLLAR SCREW M6X40		2.00
28	J770029819	O-RING 29,8X1,9		2.00
29	93736020044	Cylinder head cmpl.		0.00