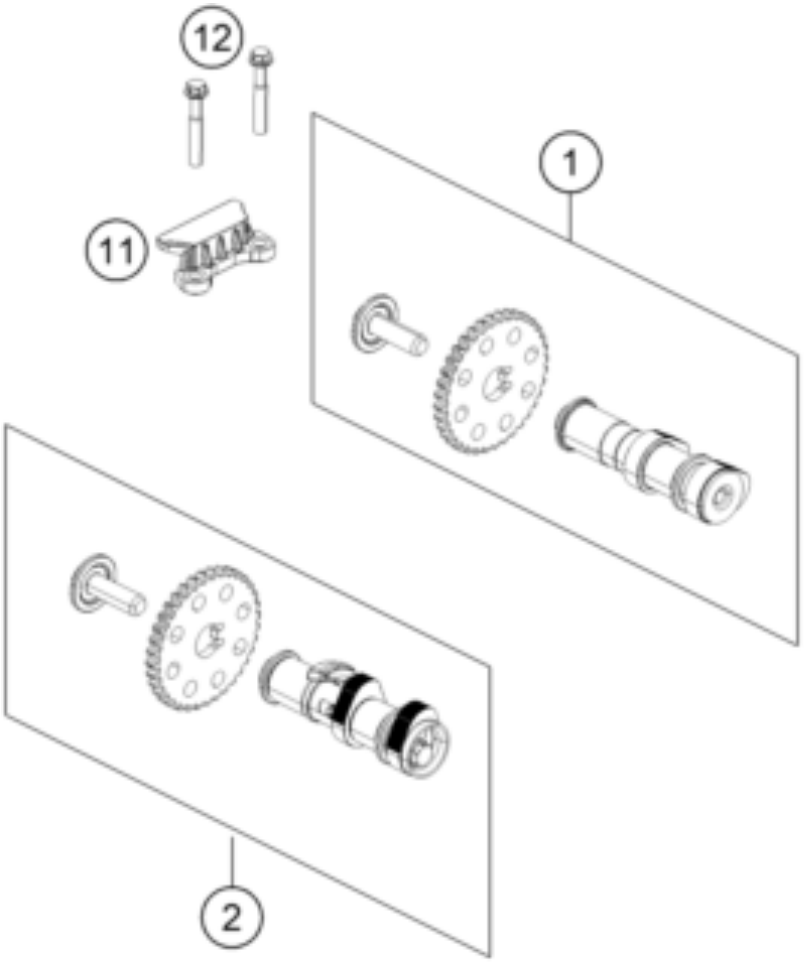
12
1
11
2

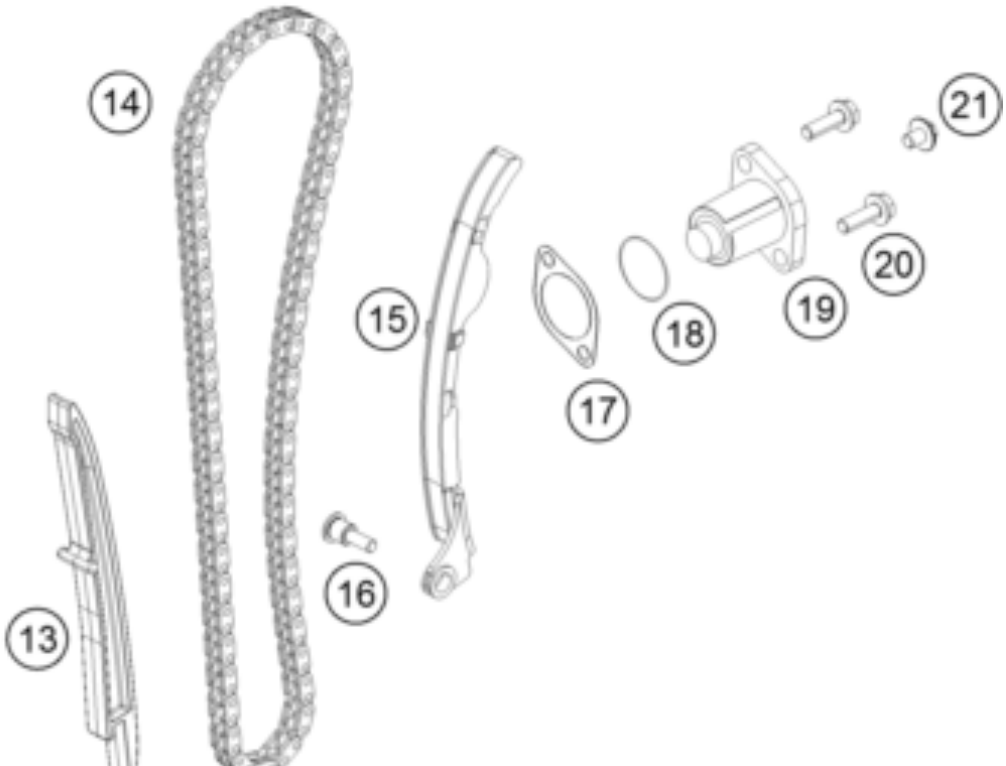
14
21
20
15
18
19
17
16
13

Pos	Part Number	Description	Additional Text	Quantity
1	93736009133	Camshaft inlet valve, complete		1.00
2	93736010133	Camshaft exhaust valve, comple		1.00
11	90236018000	CHAIN GUIDE TOP		1.00
12	J025060401	HH COLLAR SCREW M6X40		2.00
13	90236001000	TIMING CHAIN GUIDE		1.00
14	90236013000	TIMING CHAIN		1.00
15	90236002000	TENSIONER RAIL CPL.		1.00
16	90236002004	SCREW TENSIONER RAIL		1.00
17	90136003003	GASKET CHAIN ADJUSTER		1.00
18	J770010015	O-RING 10,15X1,5		1.00
19	90236003044	CHAIN ADJUSTER		1.00
20	J025060201	HH COLLAR SCREW M6X20		2.00
21	90136003002	SPECIAL SCREW 6X6		1.00