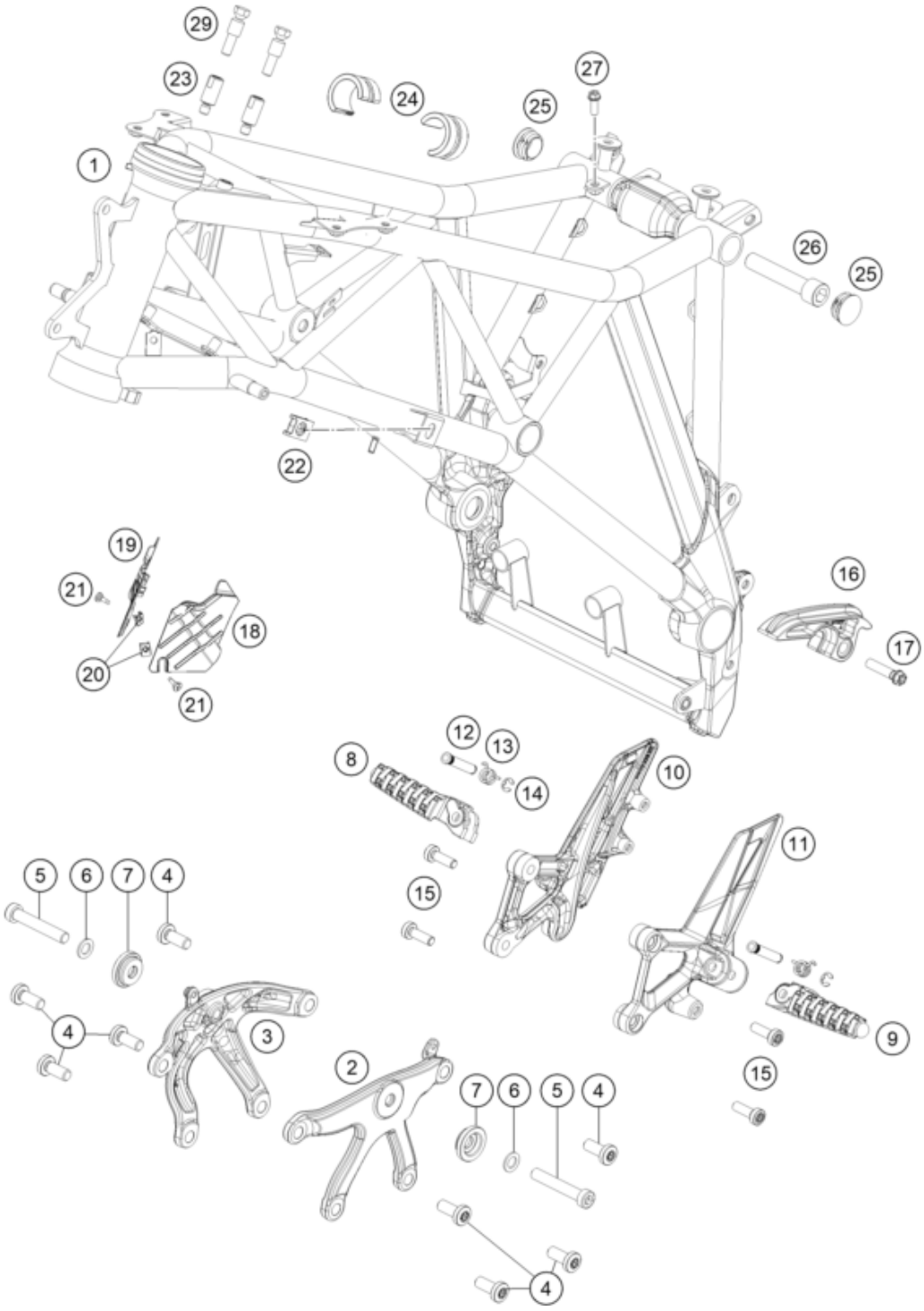

Pos	Part Number	Description	Additional Text	Quantity
1*	61503001000EB	Frame 615SA		1.00
2	6030300500033S	ENGINE SUPPORTL/S BLACK		1.00
3	6030300600033S	ENGINE SUPPORT R/S BLACK		1.00
4	0035100249	AH collar screw M10x24 ISA45		8.00
5	0035100609S	AH-COLLAR SCREW M10X60 ISA45		2.00
6	0433100003	Washer DIN0433-M10	front flasher	2.00
7	60303010000	BUSHING MOTOR MOUNTING		2.00
8	6900314100033S	FOOTREST FRONT R/S 13		1.00
9	6900314000033S	FOOTREST FRONT L/S 13		1.00
10	6130303910033S	FOOTREST SUPPORT FRONT R/S BL.		1.00
11	6130313800033S	FOOTREST PLATE FR. L/S		1.00

12	60003044100	footrest bolt, rear		2.00
13	61003042000	SPRING FOOTREST FRONT 05		2.00
14	0799060003	retaining washer DIN 6799 - 6		2.00
15	0035080256	AH collar screw M8x25 ISA45		4.00
16	61304076000	CHAIN SLIDING BLOCK-FRAME		1.00
17	0025080356	HH collar screw M8x35 TX40		1.00
18*	61503085000	Frame cover left		1.00
19	61403086000	FRAME COVER RIGHT		1.00
20	69008021080	clip nut M5		2.00
21	69008021060	special screw M5x17		2.00
22	54603048000	RANGE CHANGE METAL NUT M8		1.00
23*	61503001013	Connecting piece keyless ignit		2.00
24	61007014000	SPACER FUEL TANK 05		2.00
25	61003088000	PLUG SFL28 05		2.00
26	60004017000	SCREW M14X1,5 L=73MM 03		1.00
27	0025060126	HH collar screw M6x12 TX30		1.00
29*	61611064000	Tamper-proof screw		2.00

* = New part