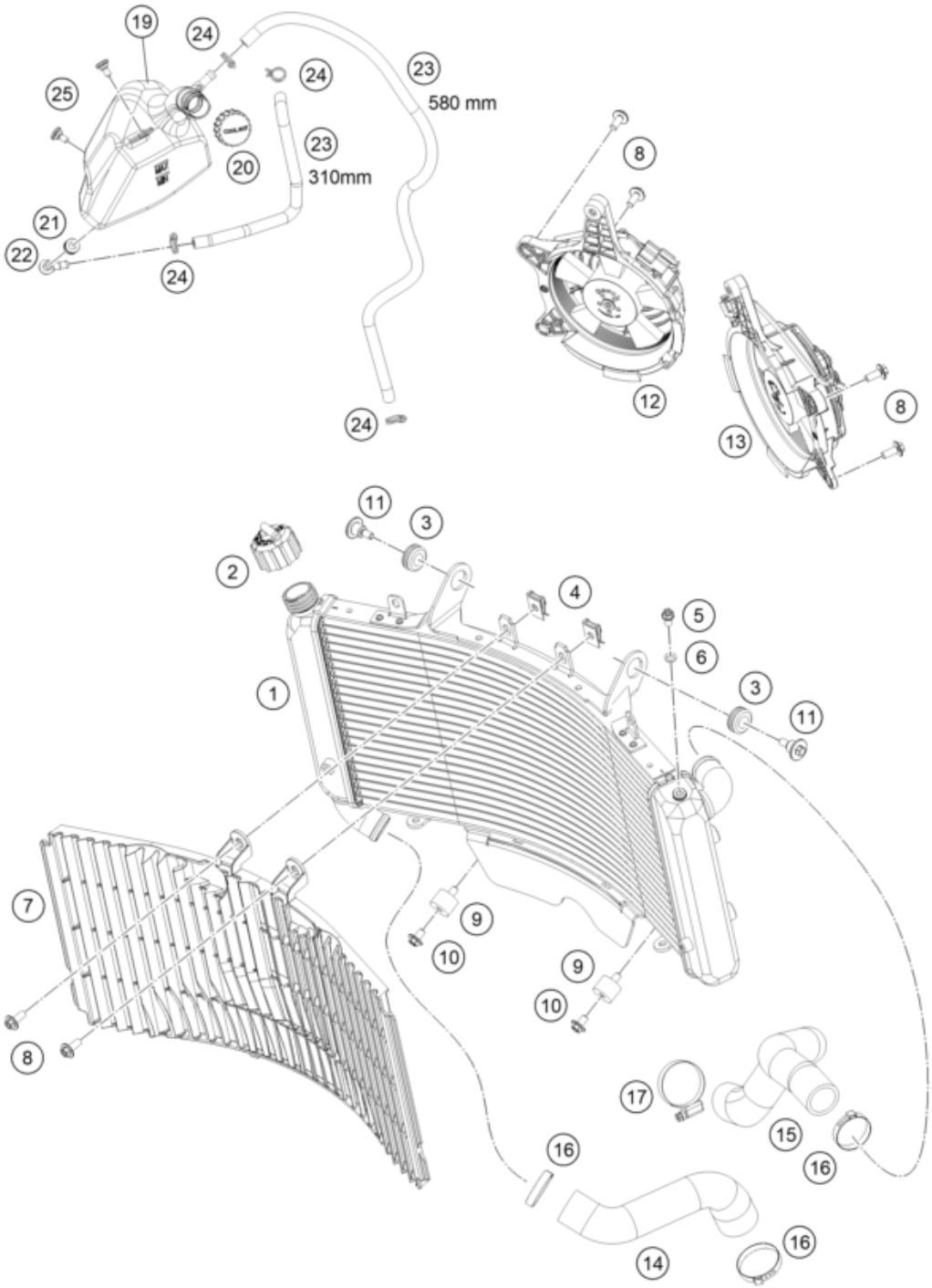

Pos	Part Number	Description	Additional Text	Quantity
1	63535010000	Radiator		1.00
2	62535009000	RADIATOR CAP 1,4 BAR		1.00
3	41001052000	RUBBER SLEEVE D=12MM		2.00
4	54603048100	clip nut M6		2.00
5	0025060126	HH collar screw M6x12 TX30		1.00
6	60035048000	ALU-GASKET 6X10X1.5		1.00
7	63535040000	Radiator protection		1.00
8	0024060156	HH collar screw M6x15 TX30	ONLY USA	6.00
9	43205062100	silentbloc 20x15-M6x10-(1)	ONLY FOR USA	2.00
10	0024060106	HH COLLAR SCREW M6X10 TX30		2.00
11	60035001000	SPECIAL SCREW M6X21 WS=8		2.00
12	63535141044	Radiator fan right, cmpl.		1.00

13	63535041044	Fan left cpl.		1.00
14	63535026000	molded hose radiator		1.00
15	63535027000	molded hose radiator		1.00
16	00050331706	Stufenlose Einohrklemme 33,1mm		3.00
17	10001120000	Hose clamp 25-40 SGT 4		1.00
19	63535065001	expansion tank water		1.00
20	60335066044	Latch, compens. tank cpl.		1.00
21	70003065000	RUBBER SLEEVE 6X9X14MM		1.00
22	60035068000	Angle piece, reservoir		1.00
23	60035067001	HOSE 6X10 EPDM 03		0.00
24	58007117000	YDNAC-CLAMP 10107 10MM		4.00
25	69008021160	special screw M5x12		2.00