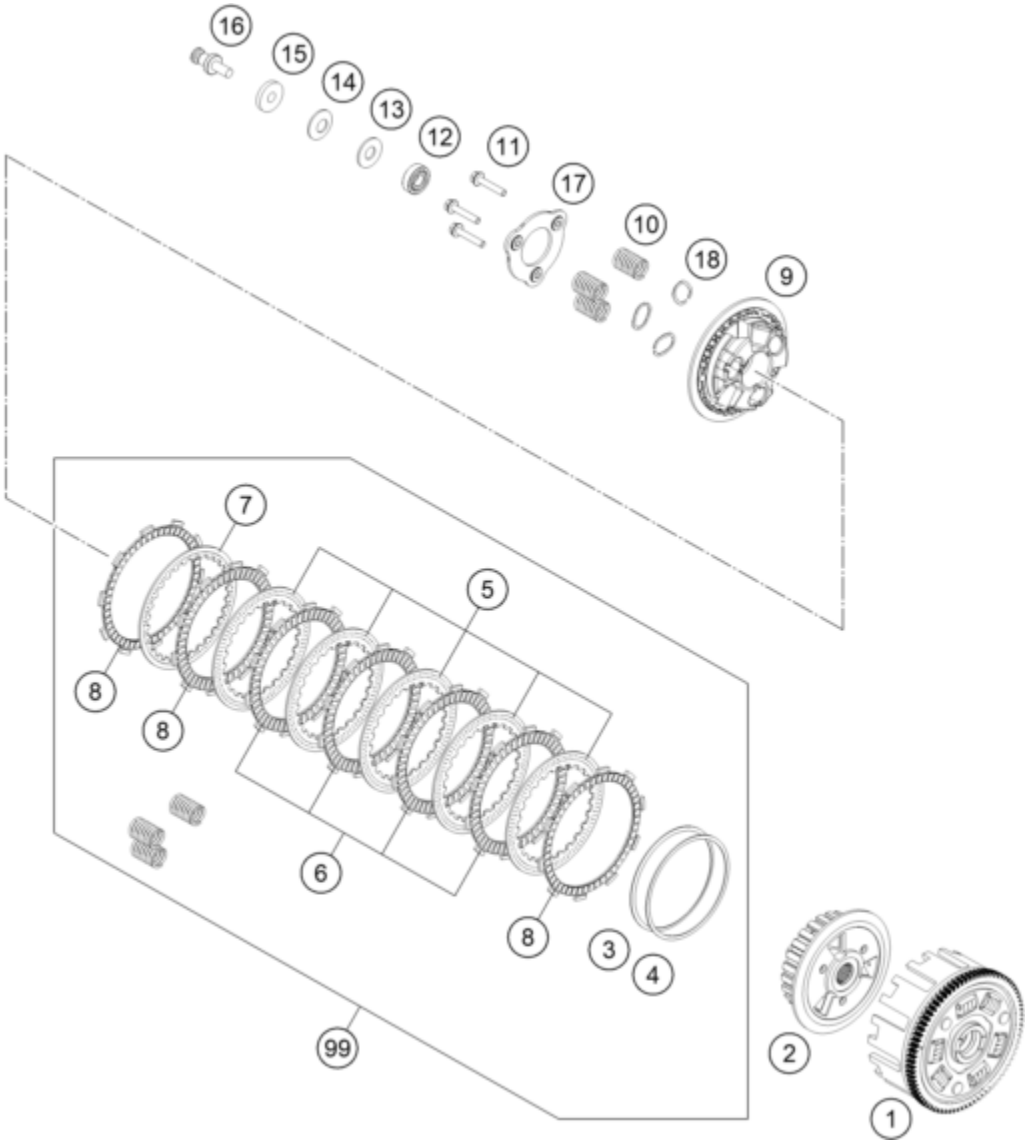

Pos	Part Number	Description	Additional Text	Quantity
1	93832101033	Outer clutch hub		1.00
2	90232102000	INNER CLUTCH HUB		1.00
3	90232134000	JUDDER SPRING		1.00
4	90232135000	SEAT JUDDER SPRING		1.00
5	90232010100	INTERMEDI. DISC A		5.00
6	90232011000	LINING DISC		4.00
7	90232110000	INTERMEDI. DISC B		1.00
8	90232211000	LINING DISC TURNED OFF		3.00
9	90232103000	PRESSURE PLATE		1.00
10	90232105000	CLUTCH SPRING		3.00
11	90232101101	HH COLLAR SCREW M6X35		3.00
12	J625069020	BALL BEARING 6902 15X28X7		1.00
13	90232017000	SHIM		1.00
14	90236015001	SPECIAL WASHER		1.00
15	90232019000	NUT F. CLUTCH		1.00
16	90232048004	PULL ROD		1.00
17	90232006000	STOPPER PLATE		1.00
18	90232004000	SPRING SEAT		3.00

99	90232111010	CLUTCH KIT 390 DUKE 15		0.00