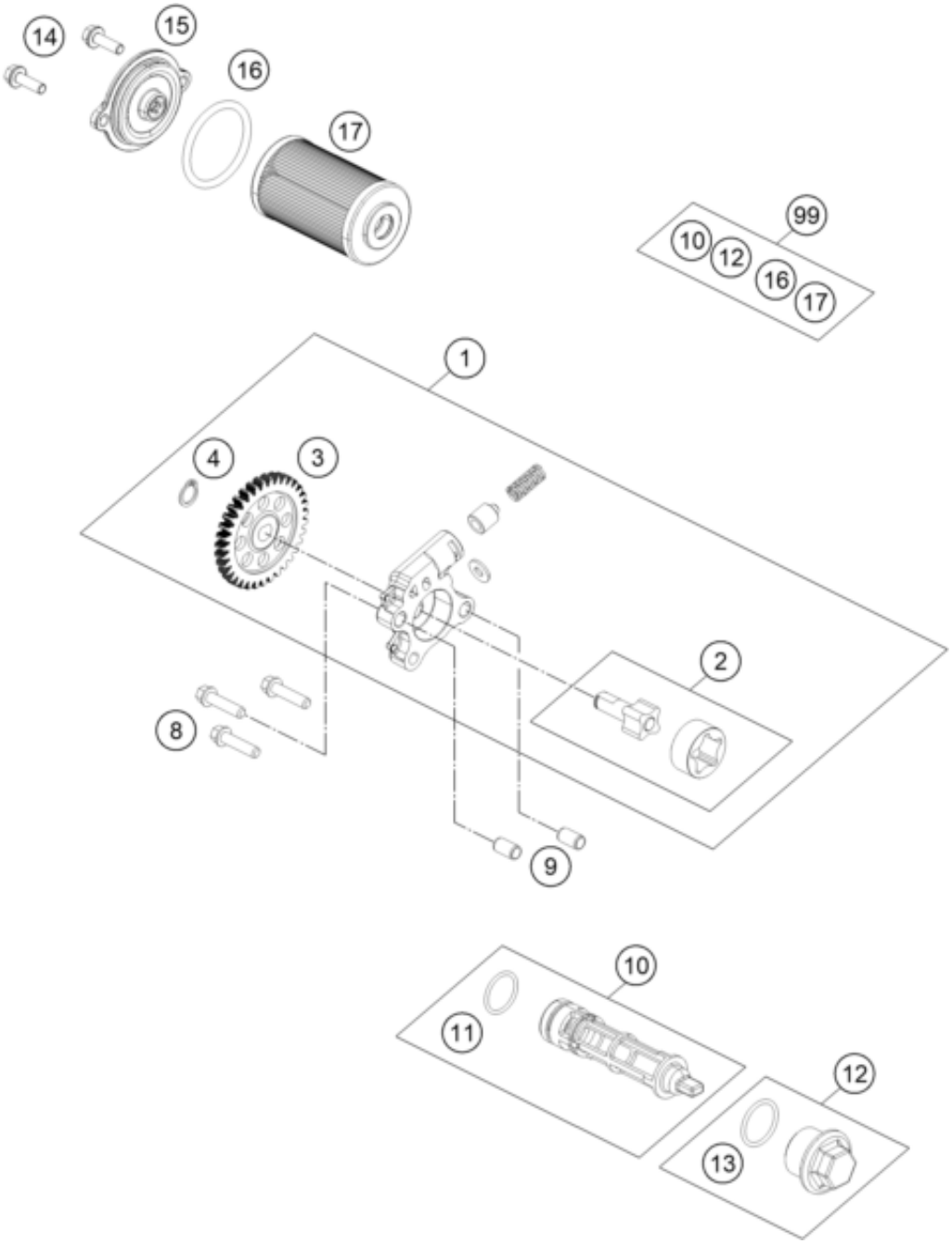


| Pos | Part Number | Description | Additional Text | Quantity |
|---|---|---|---|---|
| 1 | 90138007133 | OIL PUMP ASSY | | 1.00 |
| 2 | 90138002044 | OIL PUMP SHAFT CPL. | | 1.00 |
| 3 | 90138001000 | OIL PUMP GEAR | | 1.00 |
| 4 | J471010100 | Seeger ring 10X1,0 | | 1.00 |
| 8 | J028060303S | HH COLLAR SCREW M6X30 WS8 | | 3.00 |
| 9 | 90130024000 | PIN DOWEL 8X6,4X14MM | 14mm length | 2.00 |
| 10 | 90238015033 | MESH STRAINER CPL. | | 1.00 |
| 11 | J770017721 | O-RING 17,7X2,1 MM | | 1.00 |
| 12 | 90138015050 | CLOSURE CAP OIL SCREEN | | 1.00 |
| 13 | 90138015052 | O-RING | | 1.00 |
| 14 | J025060161 | Hex collar screw M6X16 | | 2.00 |
| 15 | 90138006000 | OIL FILTER CAP | | 1.00 |
| 16 | J770039326 | O-RING 39,34X2,62 | | 1.00 |

| | | | | |
|---|---|---|---|---|
| 17 | 90138015000 | OIL FILTER | | 1.00 |
| 99 | 90138015010 | OILFILTER SERVICE KIT 125 DUKE | | 0.00 |