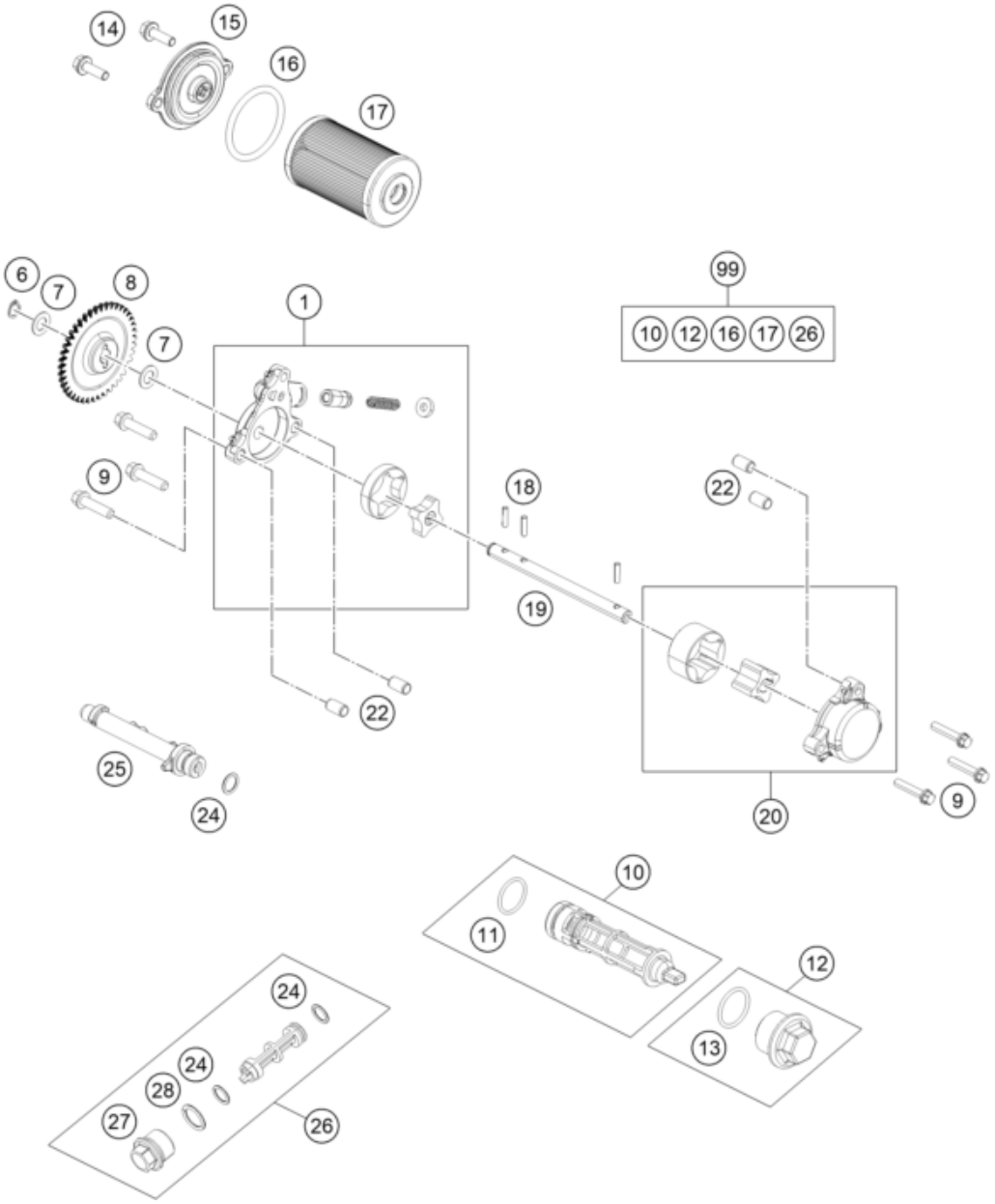

Pos	Part Number	Description	Additional Text	Quantity
1	90238010044	OIL PUMP CPL.		1.00
6	J471010100	Seeger ring 10X1,0		1.00
7	J125100006	WASHER 10,2X18X1		2.00
8	90238001000	GEAR OIL PUMP		1.00
9	J028060303S	HH COLLAR SCREW M6X30 WS8		6.00
10	90238015033	MESH STRAINER CPL.		1.00
11	J770017721	O-RING 17,7X2,1 MM		1.00
12	90138015050	CLOSURE CAP OIL SCREEN		1.00
13	90138015052	O-RING		1.00
14	J025060161	Hex collar screw M6X16		2.00
15	90138006000	OIL FILTER CAP		1.00
16	J770039326	O-RING 39,34X2,62		1.00
17	90138015000	OIL FILTER		1.00
18	90238003000	PARALLEL PIN		3.00
19	90238002000	SHAFT OIL PUMP		1.00
20	90238008044	OIL PUMP CPL.		1.00

22	90130024000	PIN DOWEL 8X6,4X14MM	14mm length	4.00
24	J7700090151	O-RING 9X1,5		3.00
25	90238013000	OIL RAIL		1.00
26	90238016044	MESH STRAINER CPL.		1.00
27	90238017000	CAP STRAINER		1.00
28	J770012520	O-RING 12,5X2		1.00
99	90238015010	OILFILTER SERVICE KIT 390 DUKE		0.00