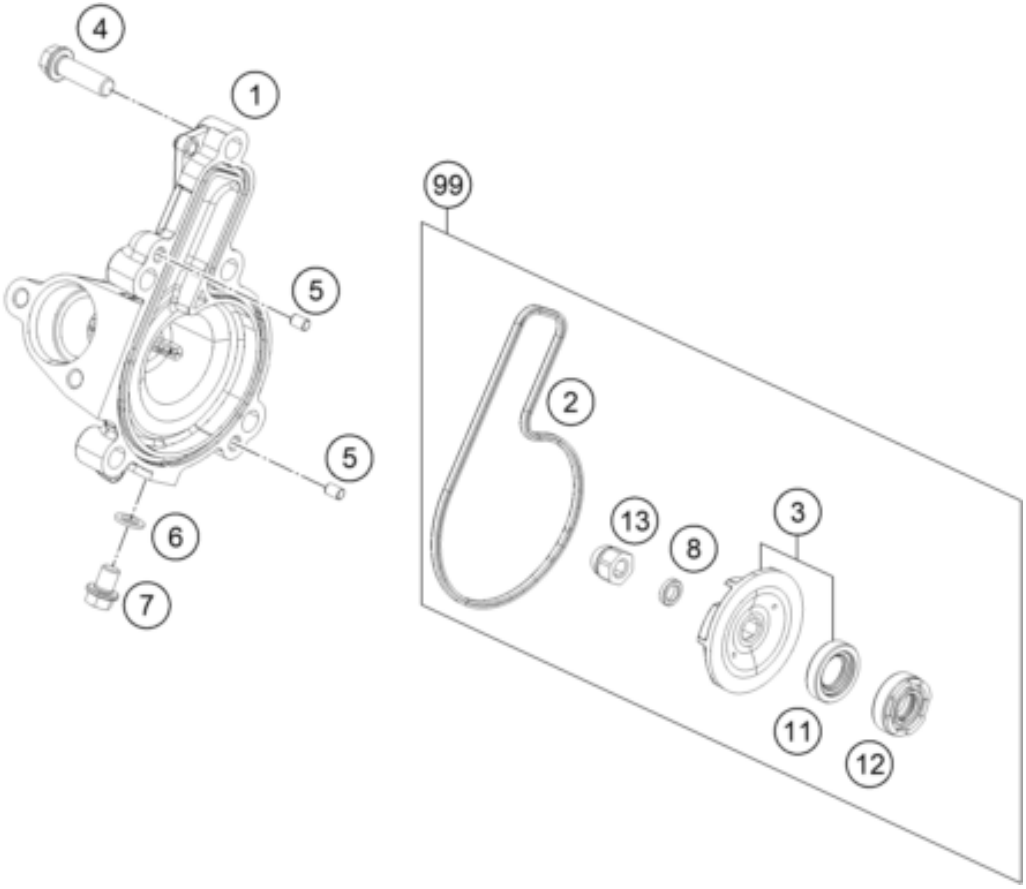


| Pos | Part Number | Description | Additional Text | Quantity |
|---|---|---|---|---|
| 1 | 91235052000 | WATER PUMP COVER | | 1.00 |
| 2 | 90135053000 | WATER PUMP COVER GASKET | | 1.00 |
| 3 | 90135055044 | KIT WATER PUMP ROTOR & SEAL | | 1.00 |
| 4 | J025060206 | HH COLLAR SCREW M6X20 SW10 | | 5.00 |
| 5 | 90134013000 | Parallel pin | | 2.00 |
| 6 | J603061001 | COPPER GASKET | | 1.00 |
| 7 | 90110057000 | BOLT M6X10 | | 1.00 |
| 8 | 90130055006 | SPACER SHIM | | 1.00 |
| 11 | J760122455 | SHAFT SEALING RING 12X24X5,5 | | 1.00 |
| 12 | 0760122406 | Shaft seal ring 12x24x6 | | 2.00 |
| 13 | 90135058000 | DOME NUT WAPU-WHEEL | | 1.00 |
| 99 | 90135055210 | Water pump rep. kit duke | | 0.00 |