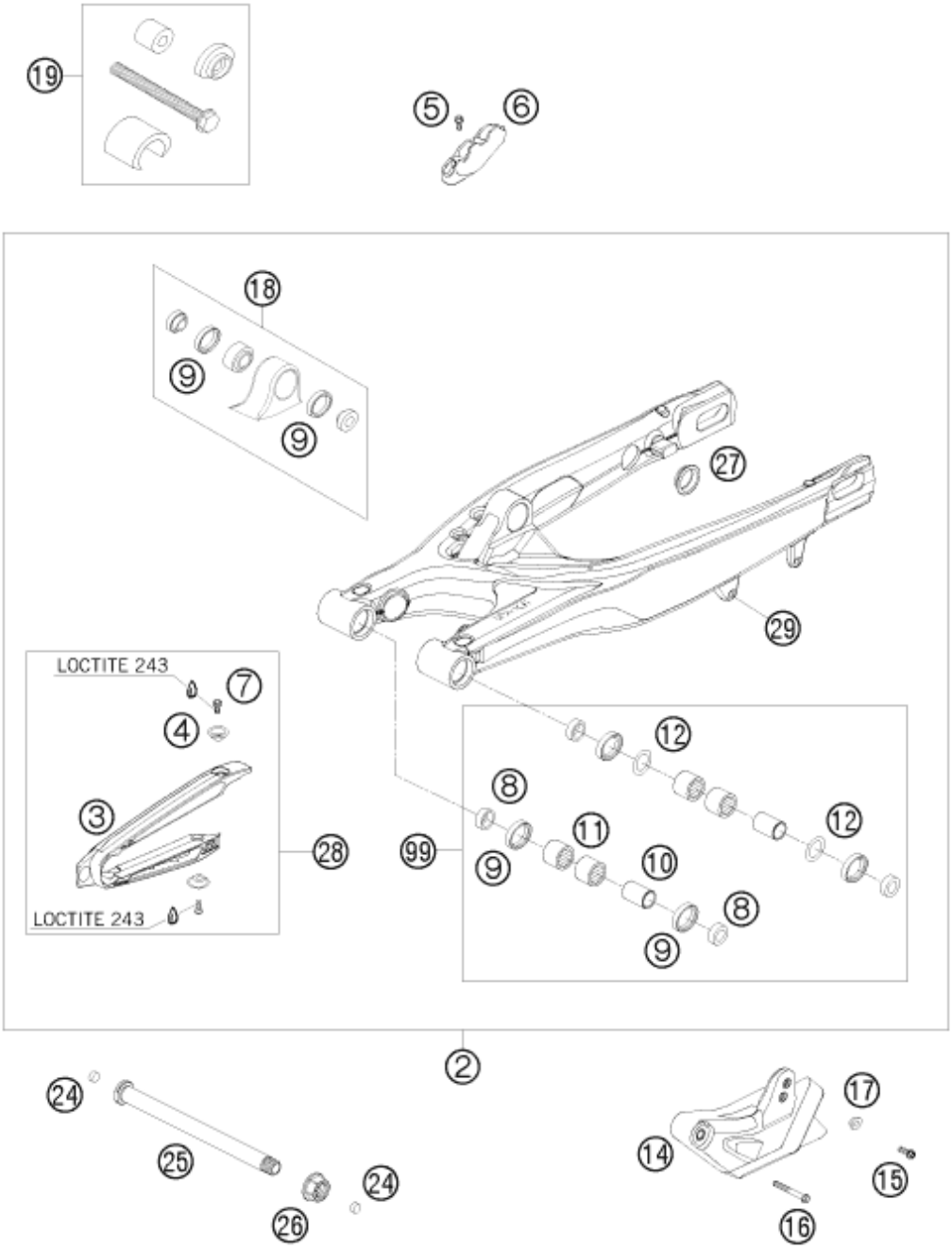

Pos	Part Number	Description	Additional Text	Quantity
2	77304030044	SWINGARM CPL. 07		1.00
3	77304066000	CHAIN SLIDING PROTECTION		1.00
4	77304066050	chain slider bushing		2.00
5	0009050103	SPECIAL SCREW M 5,0X10		2.00
6	77313047000	BRAKE HOSE GUIDE LOWER 07		1.00
7	59009062013	SPECIAL SCREW M6X13 WS=8 10.9		2.00
8	54804034000	Bucket f. shaft seal ring 03		4.00
9	0760253270	radial shaft seal 25x32x7		6.00
10	54804032000	BUSHING SLEEVE F. SWING ARM 03		2.00
11	58033097000	NEEDLE BEARING HK 2216		4.00
12	54603036000	STOP DISK 22,2X31,7X1		2.00
14	78004070000	CHAIN GUIDE CPL.		1.00
15	59009062019	SPECIAL SCREW M6X19 WS=8 10.9		1.00

16	0025060456	HH COLLAR SCREW M6X45 TX30		1.00
17	77304070130	BUSH. F. CHAIN FAIL. PROT. 07		1.00
18	50304090044	PIVOT BEARING+BUSH. PDS '99		1.00
19	50329000044	TOOL BEARING MOUNTING PDS		1.00
24	55009086000	PLUG SFL13		2.00
25	77304037000	SWINGARM BOLT M16X1,5 07		1.00
26	54804038000	Nut with flange M16X1,5 WS=19		1.00
27	58404041100	CLOSING COVER ROUND 03	EXC+MXC SWINGARM	4.00
28	77304066010	CHAIN GUARD CPL. 07-11		1.00
29	54603055051	PRESS IN NUT M6 STEEL ZINC		1.00
99	54804230210	SWINGARM REPAIR KIT 05-15		0.00