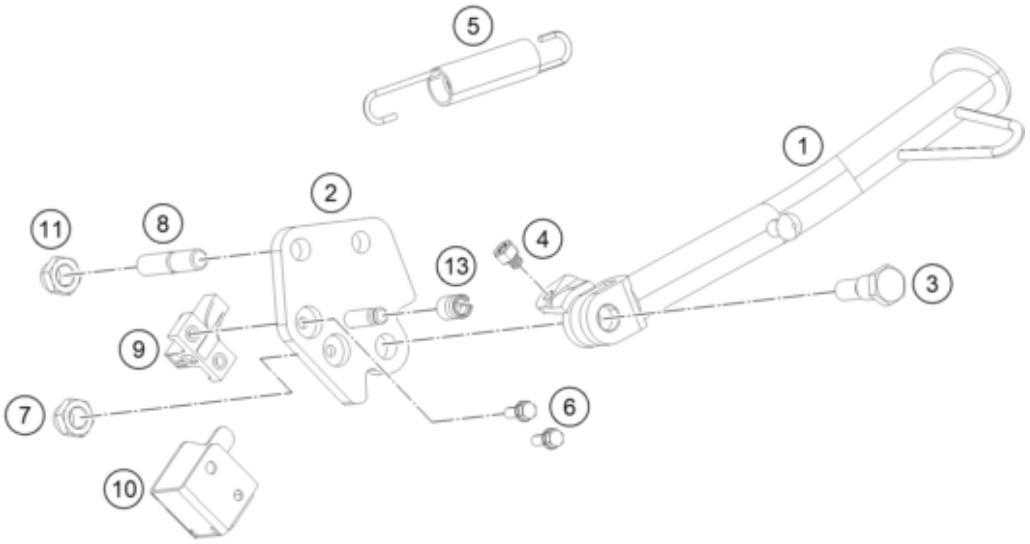

Pos	Part Number	Description	Additional Text	Quantity
1	90103023000	SIDE STAND		1.00
2	93003026000	Side stand bracket		1.00
3	90103027000	SCREW F. SIDE STAND		1.00
4	90103029000	MAGNET HOLDER	L-PART	1.00
5	90603024000	SIDE STAND SPRING		1.00
6	J011050133	HH COLLAR SCREW M5X13 SW8		2.00
7	J982101253	SELF L. NUT M10X1,25 H11 WS17		1.00
8	93003027000	bolt stud-M10X1.25XL20XBRXPREC		2.00
9	93511045000	SWITCH SIDE STAND	L-PART	1.00
10	90111045010	GUARD F. SIDE STAND SWITCH		1.00
11	93003034000	nut U flang-M10X1.25XHT.8.5XBR		2.00
13	90111040100	Bushing		1.00