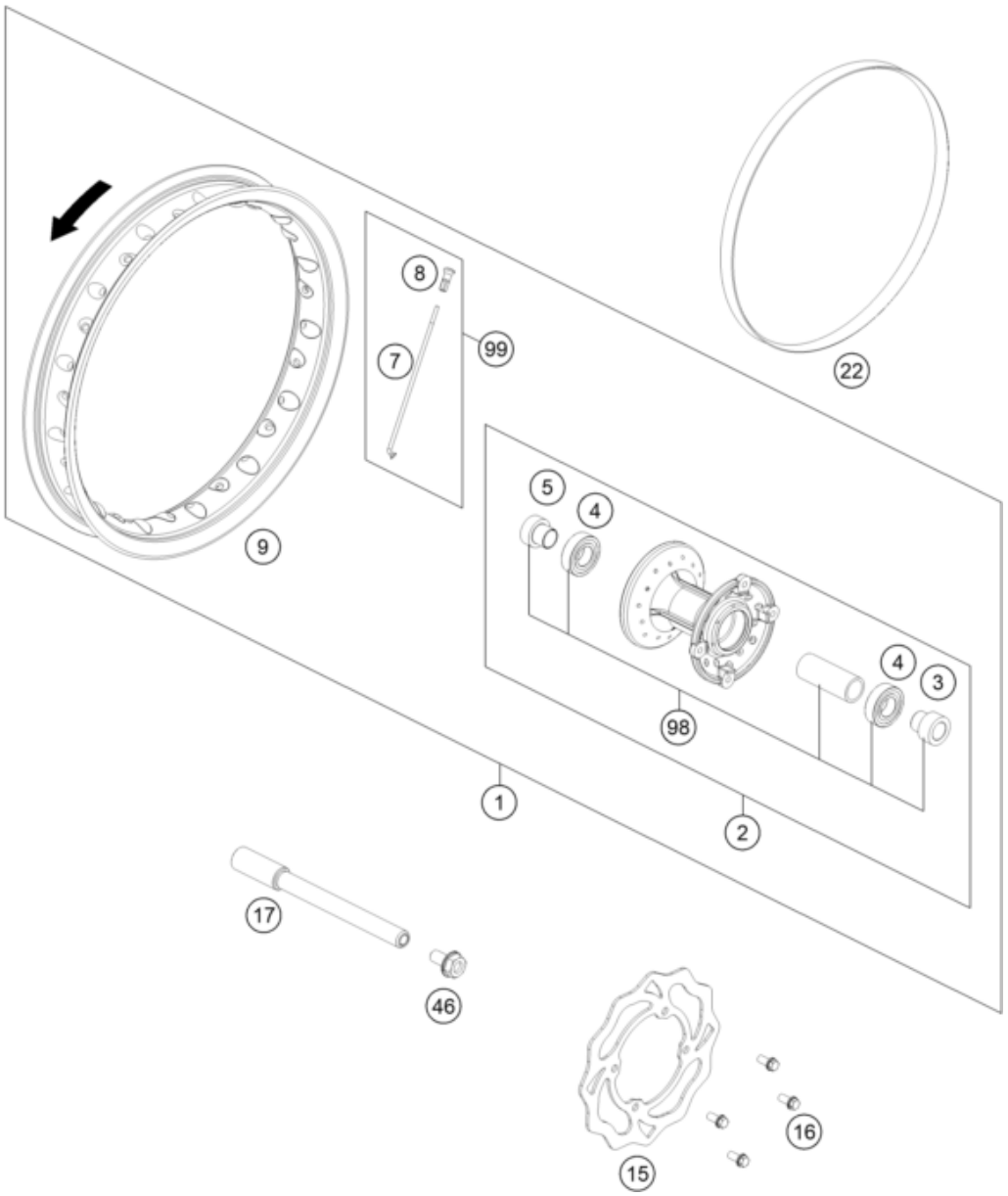

Pos	Part Number	Description	Additional Text	Quantity
1	45309001044	Front wheel 12x1,5" cmpl. 2018		1.00
2	45209010044	FRONT WHEEL HUB CPL.		1.00
3	45209012000	SPACER BUSHING LEFT		1.00
4	0625060037	GR.BALL BEAR. 6003-2RSH/C3HMTF		2.00
5	45209013000	SPACER BUSHING RIGHT		1.00
7	45209071126	SPOKE 3X126C.110°C.5 Zinc 2012		28.00
8	46210072000	SPOKE NIPPLE ALU		28.00
9	4520907040033	Front rim 1,5x12"		1.00
15	45209060000	BRAKE DISC FRONT JUN/SEN 09		1.00
16	59009062013	SPECIAL SCREW M6X13 WS=8 10.9		4.00
17	45209081000	AXLE FRONT		1.00
22	45109073100	Rim band 12"		1.00
46	49032011000	HH COLLAR SCREW M10X20 WS=17		1.00
98	45209015000	FRONT WHEEL REP. KIT 50 SX		0.00
99	00050000964	SPOKE KIT FRONT 12"		0.00