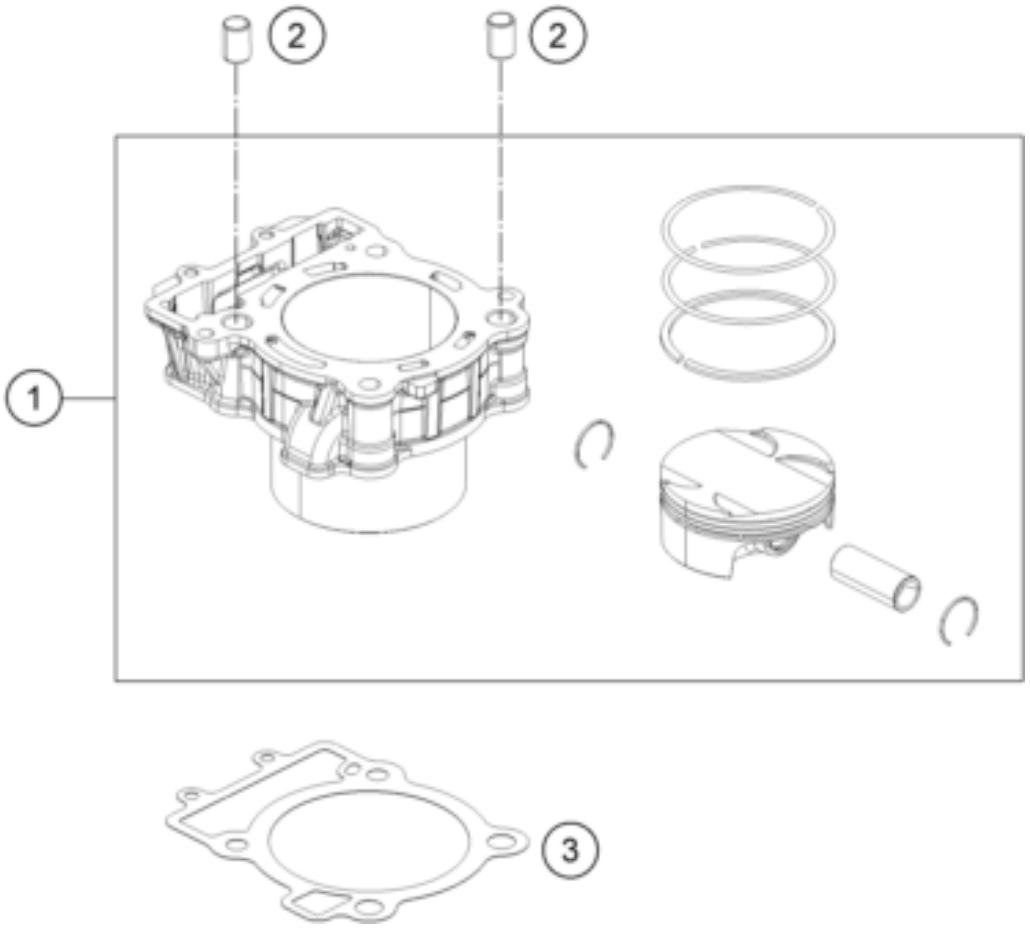





| Pos | Part Number | Description | Additional Text | Quantity |
|---|---|---|---|---|
| 1 | 93830038000 | Cylinder + piston cpl. | | 1.00 |
| 2 | 90130003007 | DOWEL D14 | | 2.00 |
| 3 | 90230035000 | GASKET CYLINDER BLOCK | | 1.00 |