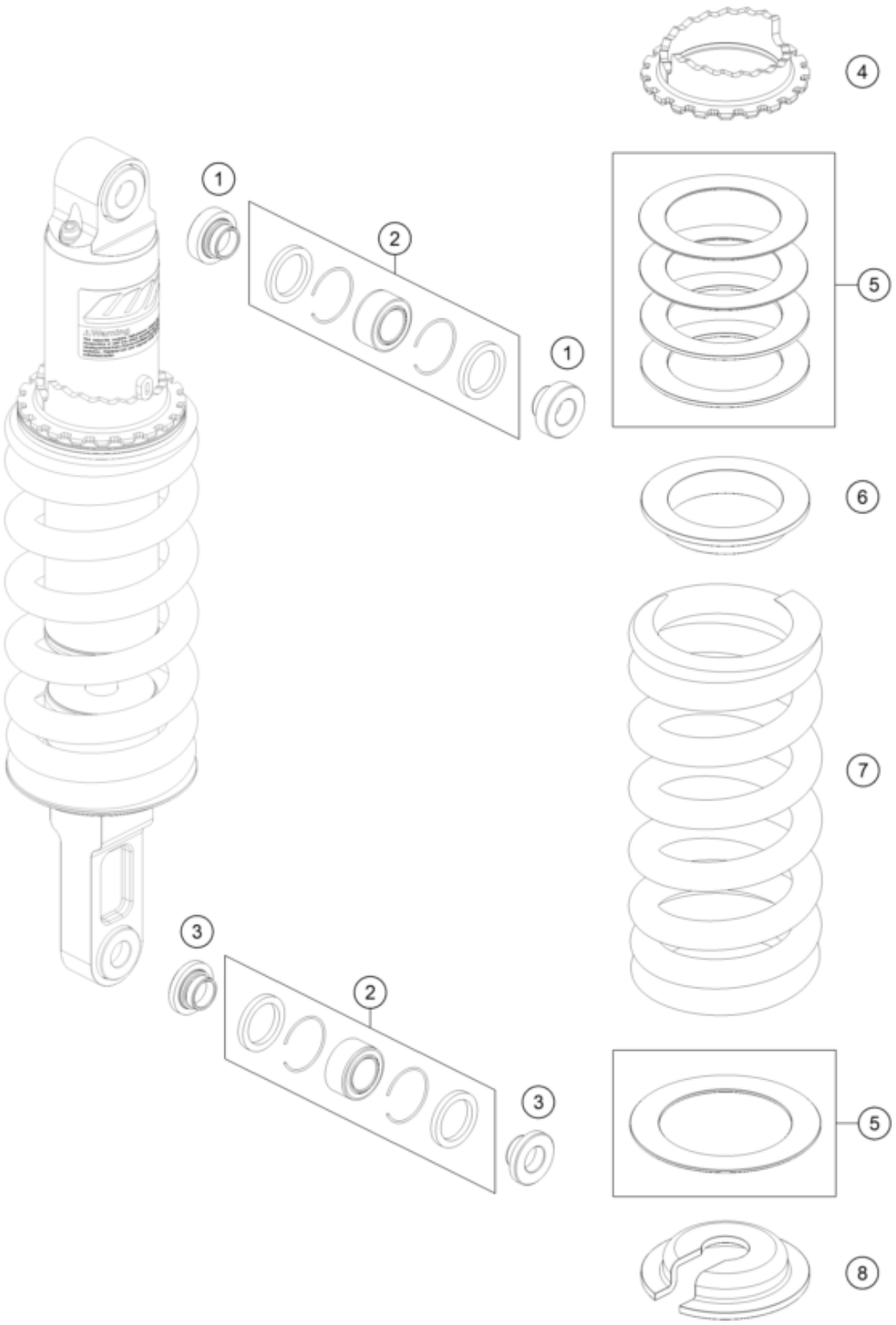

Pos	Part Number	Description	Additional Text	Quantity
1	46180064	Bearing bush 12x15/18/24,5x13,		2.00
2	R12012	Ball joint bearing kit top 12m		1.00
3	46180007	Distance bush 12x15/18/24,5x10		2.00
4	46148166	PA adjuster		1.00
5	RP80004	spacer disk kit shock absorber		1.00
6	46148041	Spring retainer 50,5x56,5x3		1.00
7	46148204	Spring l=185mm 130-160N/mm		1.00
7	91020031	Main spring (59) 115-140-185 s		0.00
7	91020032	in spring (59) 145-180-185 sho		0.00

8	46148098	Spring retainer 21x54,8x-8		1.00