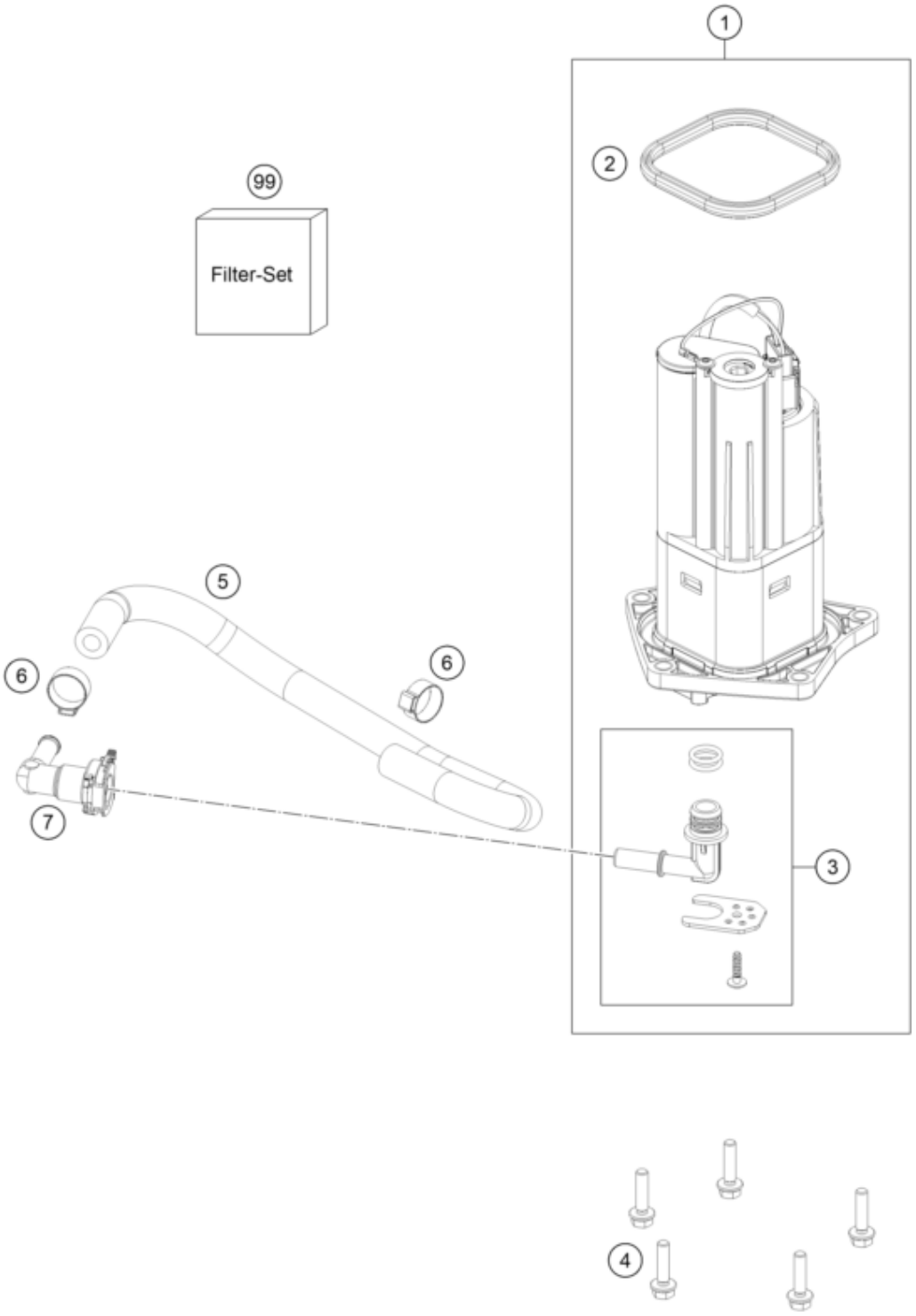

Pos	Part Number	Description	Additional Text	Quantity
1	64107088000	Fuel pump cpl.		1.00
2	64107189000	Sealing		1.00
3	64107092000	Hydraulic connection		1.00
4	0025050206	HH collar screw M5x20 TX30		5.00
5	64107016040	Fuel hose with protective slee		1.00
6	00050157706	Variable one-ear clamp 15.7mm		2.00
7	76007028000	ELBOW CONNECTOR		1.00
99	64107090000	Filter kit		0.00