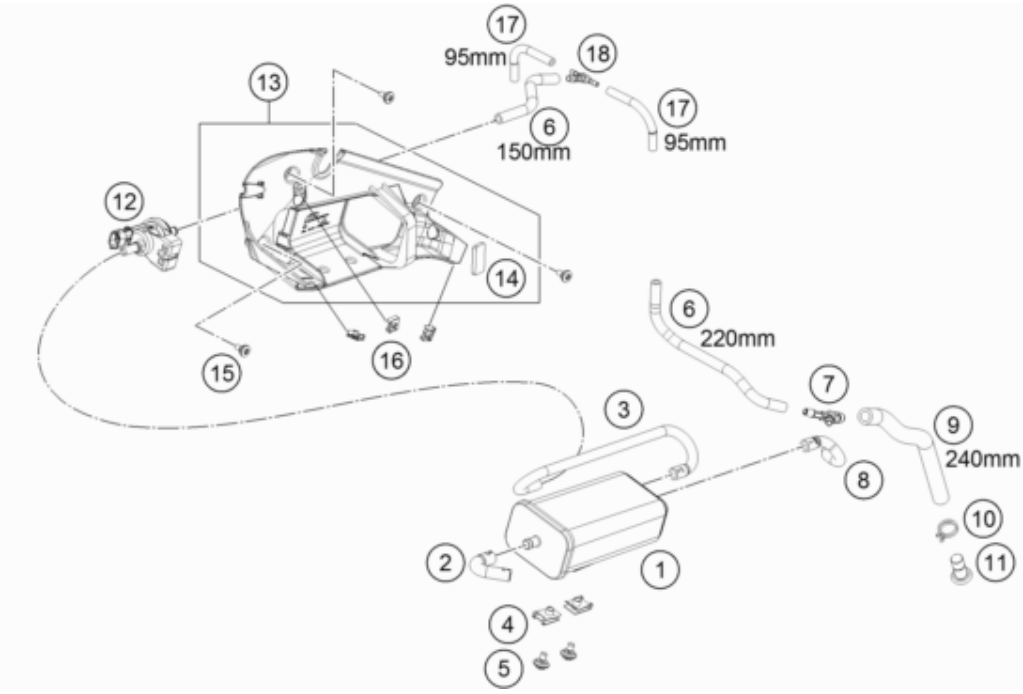

Pos	Part Number	Description	Additional Text	Quantity
1	75015001200	CARBON CANISTER		1.00
2	64115021000	ventilation hose evap. can.		1.00
3	64115022000	hose evap. ca. - purgevalve		1.00
4	54603048300	RANGE CHANGE METAL NUT M6 INOX		2.00
5	83008000012	special screw M6x12x3		2.00
6	78015019000	HOSE EPA D=6/10 L=2000MM		0.00
7	61315028100	Y-CONNECTOR YS 6-10-6		1.00
8	64115023000	Molded hose ACF		1.00
9	78015119000	HOSE EPA D=10/16 L=2000MM		0.00
10	58431082100	YDNAC-clamp 10173 (16MM)		1.00
11	61315026000	PLUG D=10		1.00
12	76015015000	EVAP valve		1.00
13	64103081044	Cover left cpl.		1.00
14	64108070040	Metamoll f. frame cover		1.00
15	69008021160	special screw M5x12		3.00
16	69008021080	clip nut M5		3.00
17	78015021000	HOSE EPA D=4/8 L=2000MM		0.00
18	64115026000	Hose connection nozzles		1.00