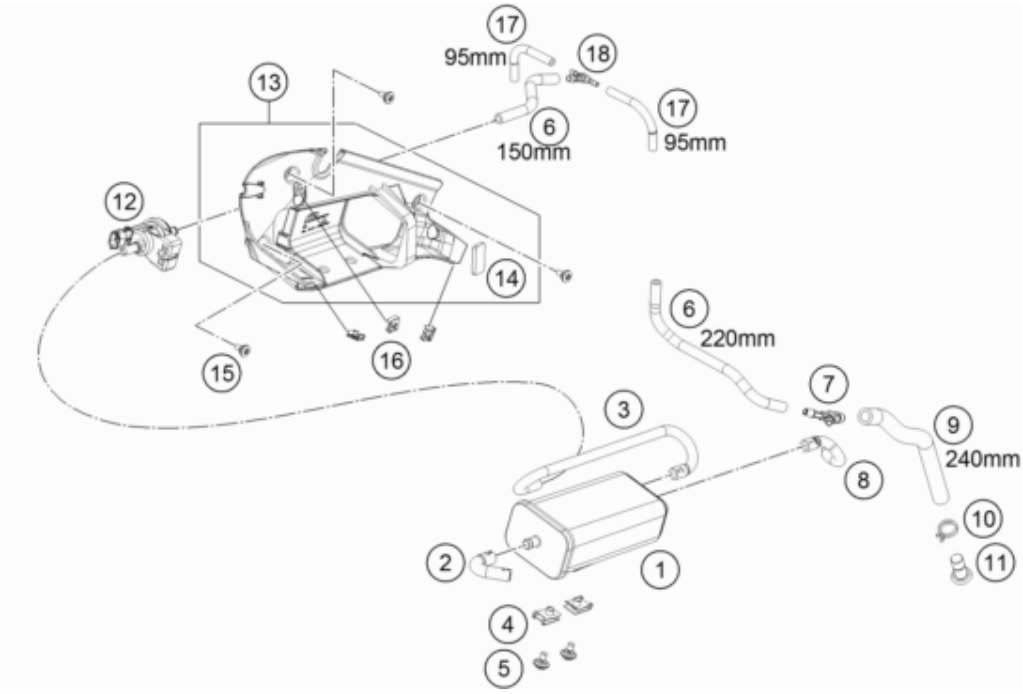


| Pos | Part Number | Description | Additional Text | Quantity |
|---|---|---|---|---|
| 1 | 75015001200 | CARBON CANISTER | | 1.00 |
| 2 | 64115021000 | ventilation hose evap. can. | | 1.00 |
| 3 | 64115022000 | hose evap. ca. - purgevalve | | 1.00 |
| 4 | 54603048300 | RANGE CHANGE METAL NUT M6 INOX | | 2.00 |
| 5 | 83008000012 | special screw M6x12x3 | | 2.00 |
| 6 | 78015019000 | HOSE EPA D=6/10 L=2000MM | | 0.00 |
| 7 | 61315028100 | Y-CONNECTOR YS 6-10-6 | | 1.00 |
| 8 | 64115023000 | Molded hose ACF | | 1.00 |
| 9 | 78015119000 | HOSE EPA D=10/16 L=2000MM | | 0.00 |
| 10 | 58431082100 | YDNAC-clamp 10173 (16MM) | | 1.00 |
| 11 | 61315026000 | PLUG D=10 | | 1.00 |
| 12 | 76015015000 | EVAP valve | | 1.00 |
| 13 | 64103081044 | Cover left cpl. | | 1.00 |
| 14 | 64108070040 | Metamoll f. frame cover | | 1.00 |
| 15 | 69008021160 | special screw M5x12 | | 3.00 |
| 16 | 69008021080 | clip nut M5 | | 3.00 |
| 17 | 78015021000 | HOSE EPA D=4/8 L=2000MM | | 0.00 |
| 18 | 64115026000 | Hose connection nozzles | | 1.00 |