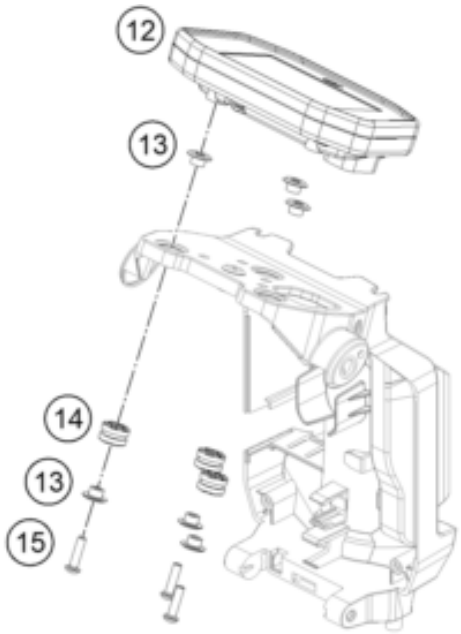

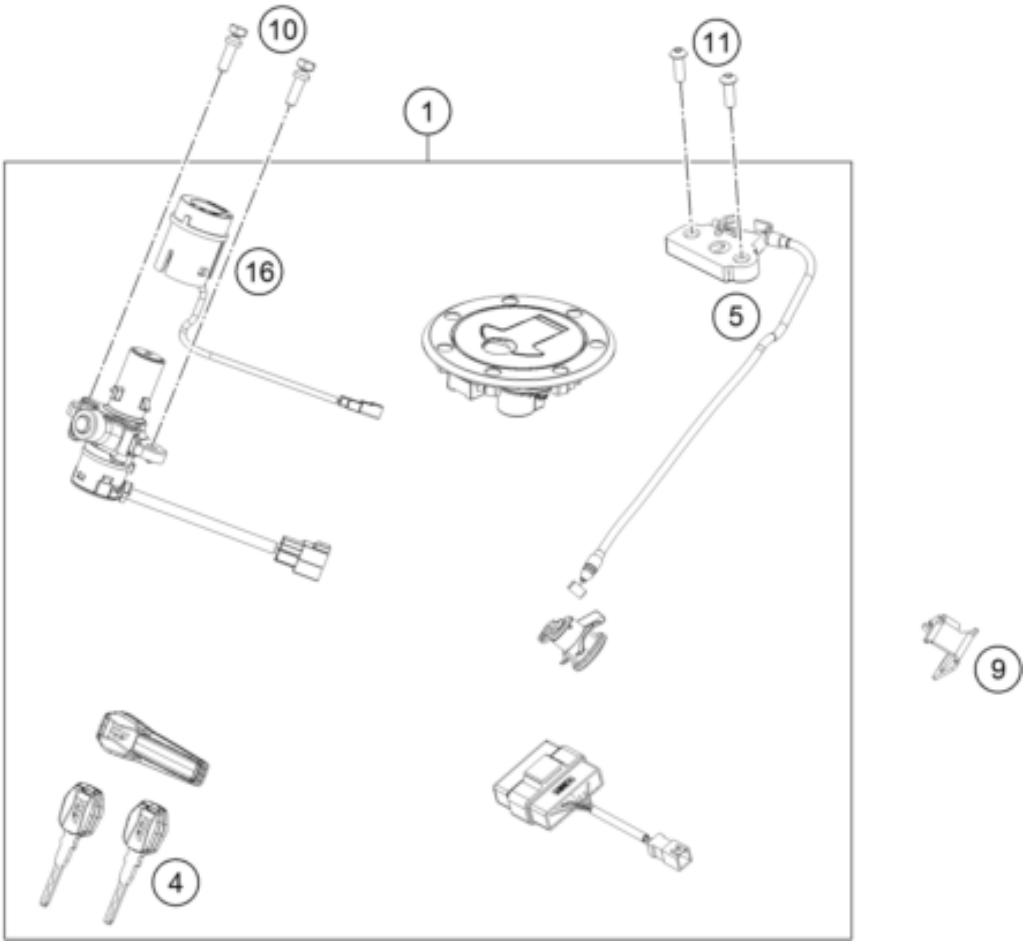

Pos	Part Number	Description	Additional Text	Quantity
1	64111066044	Lockset CPL.	L-PART	1.00
4	64111067010	Blank Key KTM		0.00
4	64111067000	KTM ignition key		1.00

5	64107050000	Seat lock		1.00
9	64107051000	Cable Bracket Lock		1.00
10	76011064200	Tear-off screw M6 ignition loc		2.00
11	0738060181	BHCS ISO 7380 M6X18		2.00
12	64114069000	Dashboard		1.00
13	6071406905033	Bushing, speedometer bracket		6.00
14	61314069051	DAMP. COMPONENT SPEEDOMETER		3.00
15	0738050202	Lens head screw ISO 7380-M5X20		3.00
16	64111066020	ANTENNA		1.00